CONTENTS 目录



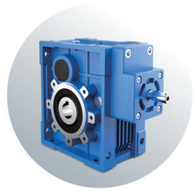





A
产品图片 / PRODUCT PICTURE ····· 01
产品概述 / PRODUCTS OVERVIEW ····· 02
型号说明 / MODEL ILLUMINATE ····· 03

B
选型相关参数 / RELEVANT PARAMETER ····· 05
减速机选型表 / GEAR UNIT SELECTION TABLES ····· 12
输入尺寸图表 / INPUT SIZE DIAGRAM ····· 29

C
外形尺寸图表 / OUTLINE DIMENSION SHEET ····· 31
附件尺寸图表 / ACCESSORIES DIMENSION SHEET ····· 36
安装方位图 / INSTALLATION POSITIONS DIAGRAM ····· 38

D
安装 / INSTALLATION ····· 41
润滑油 / LUBRICATION ····· 43
维护 / MAINTENANCE ····· 44

E
定货须知 / NOTICE FOR ORDER ····· 45
减速机运转故障 / GEAR UNIT MALFUNCTIONS ····· 46
减速机负载特征表(参考件) / MCHARGE CHARACTERISTIC CHART(FOR REFEREBCE) ····· 47
产品构造原理 / PRODUCT STRUCTURE PRINCIPLE ····· 49

匡城传动 SHKCJX
传动装置**专业制造商**
PROFESSIONAL MANUFACTURER OF TRANSMISSION DEVICE
SKM系列
品牌源于匡城　口碑自然来　www.shkcjx.com

产品图片 / PRODUCT PICTURE



SKM28B~58B(IEC)

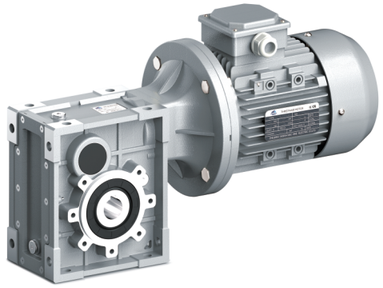

SKM28B~58B(MV)

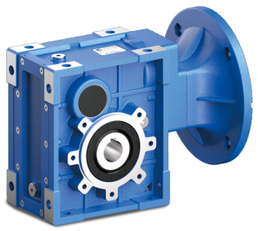

SKM28C~58C(IEC)

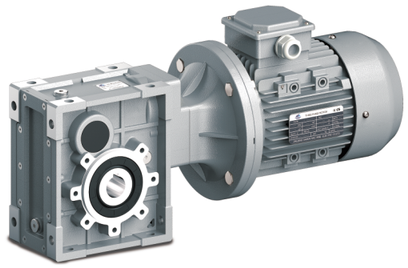

SKM28C~58C(MV)

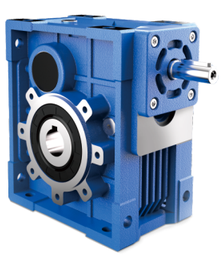

SKM28B~58B(HS)

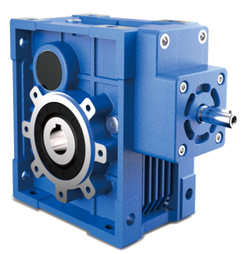

SKM28C~58C(HS)

匡城传动 SHKCJX
传动装置**专业制造商**
PROFESSIONAL MANUFACTURER OF TRANSMISSION DEVICE
SKM系列
品牌源于匡城　口碑自然来　www.shkcjx.com

产品概述 / PRODUCTS OVERVIEW

产品特点 / Products features

SKM系列斜齿-准双曲面齿轮减速机是我公司自主研发的新一代实用性产品。融合了国内外先进技术，具有以下一些主要特点：

1. 采用准双曲面齿轮传动，传动比大；
2. 输出扭矩大，传动效率高，节能环保；
3. 优质铝合金铸造，重量轻，不生锈；
4. 传动平稳，噪音小，适合在优劣环境中长期连续工作；
5. 美观耐用，体积小；
6. 可适应全方位安装，应用广泛，使用方便；
7. SKM系列减速机安装尺寸与NMRV系列蜗轮蜗杆减速机完全兼容（SKM28与NMRV050部分尺寸不同）；
8. 模块化组合，可多种形式组合，满足各种传动条件的需求。

SKM series helical-hypoid gear units is a new-generation of product developed by our company,with a compromise of advanced technology both at home and abroad,its main features are as follows:

1.Driven by hypois gear,has big ratios.
2.Large in output torque,high efficiency,energy saving and environmental protection.
3.Made of high-quqlity aluminum alloy,light in weight and nonrusting.
4.Smooth in running and low in noise,can work long time in dreadful conditions.
5.Good-looking in appearance,durable in service life and small in volume.
6.Suitable for all round installation,wide application and easy of use.
7.The mounting dimension of SKM series are compatible with NMRV series worm gear unit(A part of NMRV050 dimensions are different from SKM28).
8.Modulaw and multistructure can meet the demands of various conditions.

主要材料 / Main materials

1. 外壳：铝合金（机座：28-58）
2. 齿轮：20CrMnTi，渗碳淬火，齿面硬度56-62HRC，精磨后保持渗碳层厚度0.3-0.5mm。

1. Housing:die-cast aluminum alloy (frame size:28 to 58);
2. Gear wheel:20CrMnTi,carbonize & quencher heat treatment make the hardness of gear's surface up to 56-62 HRC,retain carburization layer's thickness 0.3 and 0.5mm after precise grinding.

表面涂装 / Surface painting

铝合金外壳：
1. 先抛丸处理，再经过特种防腐处理，保持银白金属感，并耐汽油，二甲苯等有机溶剂的腐蚀；
2. 磷化处理后，再喷PAL5010蓝色或银灰色涂料。

Aluminum alloy housing：
1. Shot blasting and special antiseptic treatment on the aluminum alloy surface.
2. After phosphating,spray the paint PAL5010 in blue or in grey.

型号说明 / MODEL ILLUMINATE

减速电机 / Geared motor

SKM　38　B　–　20.10　–　FA1　–　SS1　–　B3　MV71D4　/　BMG　/　1

① ② ③ ④ ⑤ ⑥ ⑧ ⑨ ⑩ ⑪

NO	说　明	Comments
1	减速机系列代号： SKM	Code for gear units series: SKM
2	减速机规格代号：28、38、48、58	Specification code of gear units: 28. 38. 48. 58
3	1) B：表示2级传动 2) C：表示3级传动	1) B: Means 2 stages 2) C: Means 3 stages
4	减速机速比 i	Speed ratio of reducer i
5	1.无代号表示不带输出法兰 2.FA,FB,FC,FD,FE(1/2):输出法兰代号和位置	1.No mark means without output flange 2.FA, FB, FC, FD, FE(1/2):output Flange and position
6	1.无代号表示孔输出 2.SS(1/2):单向输出轴和位置 3.DS：双向输出轴	1.No mark means hole output 2.SS(1/2):Single output shaft and position 3.DS:Double output shaft
8	安装方位代号	Installation position code
9	电机型号规格	motor type
10	1.无代号表示不带制动器 2.BMG:制动器	1.No mark means without brake 2.BMG:brake
11	电机接线盒位置，默认位置1可以不写	Position of motor terminal box default position 1 not to write out is ok

匡城传动 SHKCJX
传动装置**专业制造商**
PROFESSIONAL MANUFACTURER OF TRANSMISSION DEVICE
SKM系列
品牌源于匡城　口碑自然来　www.shkcjx.com

型号说明 / MODEL ILLUMINATE

减速机或减速机+IEC电机 / Gear unit or gear unit + IEC motor

减速机 / Gear unit　　电机 / Motor

SKM　38　B　–　20.10　–　FA1　SS1　–　71B5　B3　–　7124 或/or 0.37-4　/　1

① ② ③ ④ ⑤ ⑥ ⑦ ⑧ ⑨ ⑪

NO	说　明	Comments
1	减速机系列代号： SKM	Code for gear units series: SKM
2	减速机规格代号：28、38、48、58	Specification code of gear units: 28. 38. 48. 58
3	1) B：表示2级传动 2) C：表示3级传动	1) B: Means 2 stages 2) C: Means 3 stages
4	减速机速比 i	Speed ratio of reducer i
5	1.无代号表示不带输出法兰 2.FA,FB,FC,FD,FE(1/2):输出法兰代号和位置	1.No mark means without output flange 2.FA, FB, FC, FD, FE(1/2):output Flange and position
6	1.无代号表示孔输出 2.SS(1/2):单向输出轴和位置 3.DS：双向输出轴	1.No mark means hole output 2.SS(1/2):Single output shaft and position 3.DS:Double output shaft
7	1) 输入法兰规格代号(63B5、71B5、71B14.....) 2) HS：表示轴输入	1) Input flange code (63B5、71B5、71B14……) 2) HS: means shaft input
8	安装方位代号	Installation position code
9	1.无代号表示不带电机 2.电机型号或功率、极数	1.No mark means without motor 2.Model motos (poles of power)
11	电机接线盒位置，默认位置1可以不写	Position of motor terminal box default position 1 not to write out is ok

注：订单时请说明是否带电机，一般按不带电机供应。

NOTE: When ordering，you should show whether the reducers are equipped with motors，otherwise reducers aren’t supplied with motors.

示例Example：**SKM48C - 149.44 - B3 - MV71D4**
SKM48B - 59.55 - FA1 - 90B5

选型相关参数 / RELEVANT PARAMETER

功 率 P

$P_1=P_2/\eta$ (kW)
$P_{1n} \geqslant P_1 \cdot fs$(kW)

P_1 输入功率
P_{1n} 输入电机额定功率
η 传动效率
P_2 输出功率
fs 使用系数

SKM系列减速机的效率是根据传动级数确定，2级传动效率η为92%，3级传动效率η为90%。

POWER P

$P_1=P_2/\eta$ (kW)
$P_{1n} \geqslant P_1 \cdot fs$(kW)

P_1 Input power
P_{1n} Rated input motor power
η Transmission efficiency
P_2 Output power
fs Service factor

The efficiency of SKM gear units varies with the number of gear stages,which is 92% for 2-stage,90% for 3-stage.

转速 n / Rotation speed n

n_1 减速机输入转速
n_2 减速机输出转速

若是齿轮箱外部传动装置驱动，为了优化工作条件和提高使用寿命，建议使用1400r/min或更低转速。允许输入较高的输入转速，但在这种情况下，额定扭矩M_2会下降。

n_1 Gear units input speed
n_2 Gear units output speed

If driven by the external gearing，1400r/min or lower rotation speed is suggested so as to optimize the working conditions and prolong the service life.Higher input rotation speed is permitted，but in this situation，the rated torque M_2 will be reduced.

传动比 i / Transmission ratio i

$i=n_1/n_2$

传动比通常为小数，在选型表中保留两位小数。
Usually transmission ratio is decimal fraction with 2 radix point tagged in selection tables.

扭矩 M / Torque m

$M_2=9550 \cdot P_1 \cdot \eta / n_2$(Nm)
$M_{2n} \geqslant M_2 \cdot fs$(Nm)

M_2 输出扭矩
M_{2n} 额定输出扭矩
P_1 输入功率
η 传动效率
fs 使用系数

$M_2=9550 \cdot P_1 \cdot \eta / n_2$(Nm)
$M_{2n} \geqslant M_2 \cdot fs$(Nm)

M_2 Output torque
M_{2n} Rated output torque
P_1 Input power
η Transmission efficiency
fs Service factor

匡城传动 SHKCJX
传动装置**专业制造商**
PROFESSIONAL MANUFACTURER OF TRANSMISSION DEVICE
SKM系列 品牌源于匡城 口碑自然来 www.shkcjx.com

选型相关参数 / RELEVANT PARAMETER

使用系数 fs / Service factor fs

使用减速机时，应考虑一定的使用系数fs，它是根据每天的运转时间和启停频率Z确定的。
根据惯性加速系数确定三种负载类型，在下图中可以读取实际应用的使用系数，按下图选取的使用系数必须小于或等于从性能参数表中提供的使用系数。

The effect of the driven machine on the gear unit is taken into account to a sufficient level of accuracy using the service factor fs.The service factor is determined according to the daily operating time and the starting frequency Z.
Three load classifications are considered depending on the mass acceleration factor .You can read off the service factor applicable to your application in following figure. The service factor selected using this diagram must be less than or equal to the service factor as given in the performance parameter table.

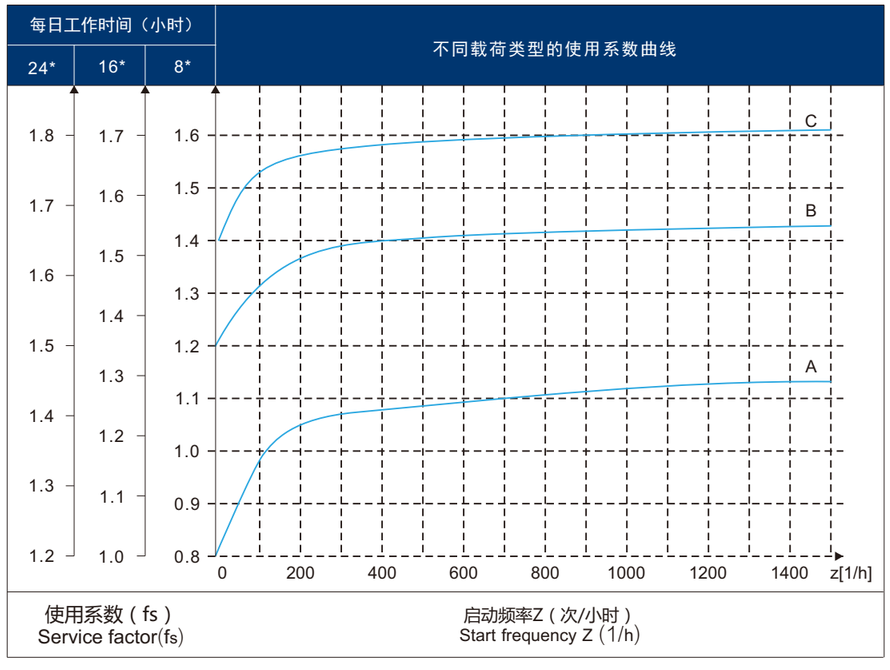

- 启动频率Z：周期包括所有启动、制动次数以及变速电机高低速变化时的次数。
- Starting frepuency Z：The cycles include all starting and braking procedures as well as change overs from low to high speed.

选型相关参数 / RELEVANT PARAMETER

负载类型 / Load classifications

负载性质：

A. 均匀冲击负载，允许惯性加速系数Fa≤0.2
B. 中等冲击负载，允许惯性加速系数Fa≤3
C. 重冲击负载，允许惯性加速系数Fa≤10

Type of load:

A. Uniform ,permitted mass acceleration factor Fa≤0.2
B. Moderate shock load,permitted mass acceleration factor Fa≤3
C. Heavy shock load,permitted mass acceleration factor Fa≤10

轻负载的螺杆输送，风扇，装备线，输送带，小型搅拌器，电梯，清洗机器，过滤器，控制驱动。
卷扬机，木工机器进料器，货物起重机，平衡器，绞螺纹机器，中型搅拌器，重型输送带，绞盘，滑动闸门，刮料机，包装机械，混凝土搅拌机，行车驱动装置，铣床，齿轮泵。
大型搅拌器，剪床，压机，离心机，旋转支撑装置，重型绞盘和起重机，磨床，石材打磨机，翻斗机，钻床，冲床，凸轴压机，摺床，机床转盘，翻桶装置，震荡装置，破碎机。

Screw feeders for light materials, fans, assembly lines, conveyor belts for light materials, small mixers, lifts, cleaning machines, fillers, control machines.

Winding devices, woodworking machine feeders, goods lifts, balancers, threading machines, medium mixers, conveyor belts for heavy materials, winches, sliding doors, fertilize scrapers, packing machines, concrete mixers, crane mechanisms, milling cutters, folding machines, gear pumps.

Mixers for heavy materials, shears, presses, centrifuges, rotating supports, winches and lifts for heavy materials, grinding lathes, stone mills, bucket elevators, drilling machines, hammer mills, cam presses, folding machines, turntables, tumbling barrels, vibrators, shredders.

惯性加速系数 / Mass acceleration factor

惯性加速系数计算如下：

Fa=Jc/Jm

Fa惯性加速系数
Jc所有外部传动惯量（kgm^2）
Jm驱动电机的传动惯量（kgm^2）
如果惯性加速系数Fa>10，请与我们技术部联系。

为了保持减速机的使用寿命，从产品样本中所选择的使用系数fs应等于或略高于计算出的使用系数fs。

The mass acceleration factor is calculated as follows:

Fa=Jc/Jm

Fa Mass acceleration factor
Jc All external mass moments of inertia(kgm^2)
Jm Mass moment of inertia on the motor end(kgm^2)
If mass acceleration factors fa>10,please call our Technical Service.

To keep the service-life of gear units,use factor fs selected from the catalogue must be equal or slightly higher than the calculated use factor fs.

举例 / Example ：

惯性加速系数2.5（负载类型B），运行时间14小时/天，（按16小时/天查图）和每小时200次起停，查图得使用系数fs=1.48。根据性能参数表所选择的使用系数fs≥1.48

Mass acceleration factor 2.5（load classification B），14hours/day operating time （read off at 16h/d） and 200 cycles/hour result in a service factor fs=1.48.

choose the service factor fs≥1.48 according to the parameter sheet.

匡城传动 SHKCJX
传动装置**专业制造商**
PROFESSIONAL MANUFACTURER OF TRANSMISSION DEVICE
SKM系列
品牌源于匡城 口碑自然来 www.shkcjx.com

选型相关参数 / RELEVANT PARAMETER

径向载荷和轴向载荷 / Overhung loads and axial forces

在决定影响径向载荷时，安装在轴端上的传动件类型必须考虑在内。不同类型的传动对应不同的传动附加系数fz，列表如下：

When determining the resulting radial loads,the type of transmission elements,mounted on the shaft end must be considered,Varous transmission elements are corresponding with following transmission element factors fz:

传动件 Transmission element	传动附加系数fz Transmission element factor fz	注释 Comments
齿轮 Gears	1.15	<17齿 teeth
链轮 Chain sprockets	1.25	<20齿 teeth
	1.40	<13齿 teeth
V 带轮 Narrow V-belt pulleys	1.75	有预紧力作用 Influence of the tensile force
平带轮 Flat belt pulleys	2.50	有预紧力作用 Influence of the tensile force
齿带轮 Toothed belt pulleys	2.50	有预紧力作用 Influence of the tensile force

作用在电机和齿轮轴上的径向载荷按如下公式计算：
The overhung loads exerted on the motor or gear shaft is then calculated as follows.

$$Fr=\frac{M\cdot 2000\cdot fz}{d_0}\ (N)$$

Fr 作用在轴上的载荷[N] Resulting radial load [N]
M 作用在轴上的扭矩[Nm] Torque on the shafts [Nm]
d_0 安装在轴上传动件的平均直径[mm] Mean diameter of the mounted transmission element in [mm]
fz 传动附加系数 Transmission element factor

许用径向载荷时根据轴承额定使用寿命L_{10h}来估算的（根据ISO0281）。对于特殊的运行条件，许用径向载荷时根据修正使用寿命Lna来确定。

The basis for determining the permitted radial loads is the computation of the rated service life L_{10h} of the bearings （according to ISO0281）For special operating conditions，the permitted radial loads can be determined with regard service life Lna.

当作用点偏离出轴中点时，许用径向载荷须按以下公式来计算，取在X点的许可数值FxL(根据轴承的使用寿命)

The permitted radial loads given in the selection tables must be calculated using the following formula in the event of force application not in the center of the shaft end.The smaller of the two values FxL （according to bearing service life）

根据轴承的使用寿命公式 / according to bearing service life ：

$$FxL=Fr_{(1,2)}\cdot\frac{a}{b+x}[N]$$

Fr_1,Fr_2 =性能参数表中的许用径向载荷（x=L/2）[N]
Permitted overhung load（x=L/2） for footmounted gear units according to he selection tables in [N]
X=从轴肩到受力点的距离[mm] Distance from the shaft shoulder to the force application point in [mm]
a,b =减速机径向转化常量[mm] Gear unit constant for overhung load conversion [mm]

选型相关参数 / RELEVANT PARAMETER

输出轴径向载荷 / Output shafts radial loads

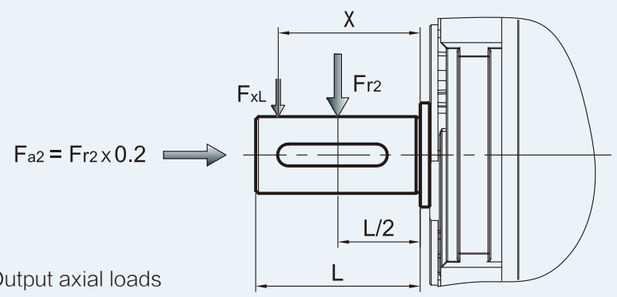

F_{a2} = 输出轴向载荷　Output axial loads

SKM减速机径向转化常量 Gear unit constants for overhung load conversion：

	SKM28B	SKM28C	SKM38B	SKM38C	SKM48B	SKM48C	SKM58B	SKM58C
a	104	104	118	118	131	131	159	159
b	78	78	93	93	101	101	119	119

输入轴径向载荷 / Input shafts radial loads

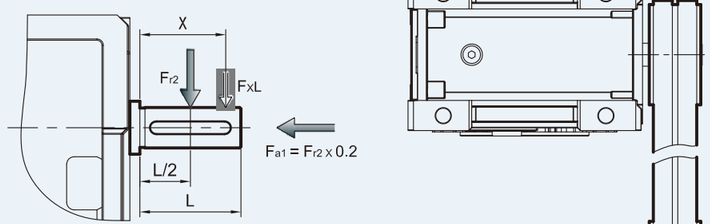

输入结构 Input structure
V带轮 Narrow V-belt pulleys
平带轮 Flat belt pulleys
齿带轮 Toothed belt pulleys

F_{a1} = 输入轴向载荷　Input axial loads

右示图的输入不被允许使用（包括三级输入）。
It is forbidden to use the input on the right chart（including 3 stage input）.

SKM 减速机径向转化常量 Gear unit constants for overhung load conversion：

	SKM28B	SKM28C	SKM38B	SKM38C	SKM48B	SKM48C	SKM58B	SKM58C
a	51.5	56	58	56	73	70	81	70
b	40	44.5	43	44.5	53	55	61	55

匡城传动 SHKCJX
传动装置**专业制造商**
PROFESSIONAL MANUFACTURER OF TRANSMISSION DEVICE
SKM系列
品牌源于匡城　口碑自然来　www.shkcjx.com

选型相关参数 / RELEVANT PARAMETER

选型表注释 / Selection tables comments

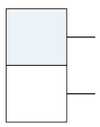

表示电机与减速机的组合是可行的

表示电机与减速机的组合是不可行的

☆	表示速比可除尽
P_{1n}	电机额定功率 [kW]
n_2	输出转速 [r/min]
M_{2n}	输出扭矩 [Nm]
M_{2max}	最大允许输出扭矩 [Nm]
F_{r2}	输出轴径向载荷 [N]
i	减速机公称传动比
i_a	减速机实际传动比
fs	使用系数
	减速电机型号
	减速机型号
	电机型号

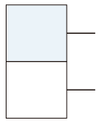

Combination with the motor in the header row is possible

Combination with the motor in the header row is not possible

☆	Finite gear unit reduction ratio
P_{1n}	Rated power driving motor [kW]
n_2	Output speed [r/min]
M_{2n}	Output torque`[Nm]
M_{2max}	Max.permissible output torque[Nm]
F_{r2}	Permissible overhung load output side [N]
i	Gear unit nominal ratio
i_a	Gear unit actual ratio
fs	Service factor
	Geared motor type
	Gear unit type
	Motor type

选型相关参数 / RELEVANT PARAMETER

选型举例 / Selection example

减速电机 / Gear motor

例：被驱动设备所需要功率0.25kW，工作8小时/天，中等冲击，启动频率100次/小时，输出转速n_2=35r/min，减速机要求B3安装，则：

查P6使用系数图表即可选使用系数fs=1.3

Example：Required power 0.25kW on driven machine，work for 8 h/day，moderate shock load，start up frequency 100（1/h），n_2=35r/min，B3 mounted，So：

Check the service factor table on page 6，choose fs=1.3

$$i=\frac{n_1}{n_2}=\frac{1400}{35}=40$$

$$P_{1n}\geq P_1\cdot fs=\frac{P2}{\eta}\cdot fs=\frac{0.25}{0.94}\times 1.3=0.345\ (kW)$$

查SKM系列性能参数表可确定减速机型号为：

SKM28B-40.29-MV71D4-B3

Choose type：

SKM28B-40.29-MV71D4-B3

减速机 / Gear units

例：被驱动设备所需扭矩为200Nm，工作8小时，均匀冲击负载，启动频率400次/小时，减速机要求FA1法兰安装，减速机要求输入转速n_1=900r/min，输出转速n_2=6r/min，查性能参数表可知，只选能三级传动形式。

查P6使用系数表即可选使用系数fs=1.05

Example:Required torque 200Nrn on driven machine,work 8 h/day,uniform load,Start up frequency 400(1/h) FA1 mounted, n_1= 900 r/min, n_2= 6 r/min, so the only selection is 3 stage after checked the table:

check the service factor table on page 6, choose fs=1.05

$$i=\frac{n_1}{n_2}=\frac{900}{6}=150$$

$$M_{2N}\geq M_2\cdot fs=200\times 1.05=210\ (Nm)$$

$$P_{1n}\geq P_1\cdot fs=\frac{M2\cdot n1}{9550\cdot\eta\cdot i}\cdot fs=\frac{210\times 900}{9550\times 0.92\times 150}\times 1.05=0.151\ (kW)$$

查SKM系列性能参数表可确定减速机型号为：

SKM48C-149. 44-FA1

Choose type：

SKM48C-149. 44-FA1

匡城传动 SHKCJX
传动装置**专业制造商**
PROFESSIONAL MANUFACTURER OF TRANSMISSION DEVICE
SKM系列
品牌源于匡城 口碑自然来 www.shkcjx.com

减速机选型表 / GEAR UNIT SELECTION TABLES

SKM 28..减速机组合表（n_1 =1400r/min）
SKM 28..Possible geometrical combinations (n_1 =1400r/min)

130Nm

减速机型号 Gear units	i 公称 Nominal	i 实际 Actual	n_2 [r/min]	M_{2max} [Nm]	F_{r2} [N]	MV63	MV71	MV80	MV90
3级/Stage									
SKM28C	300	303.19	4.6	130	4100				
SKM28C	250	256.09	5.5	130	4100				
SKM28C	200	205.11	6.8	130	4100				
SKM28C	150	151.82	9.2	130	4000				
SKM28C	125	127.76	11	100	3770				
SKM28C	100	102.32	13.7	80	3560				
SKM28C	75	75.74	18.5	130	3220				
2级/Stage									
SKM28B	60	59.55	23.5	130	2960				
SKM28B	50	50.30	27.8	130	2790				
SKM28B	40	40.29	34.7	130	2610				
SKM28B	30	29.82	46.9	130	2350				
SKM28B	25	25.10	55.8	130	2200				
SKM28B	20	20.10	69.7	100	2080				
SKM28B	15	14.88	94.1	80	1880				
SKM28B	12.5	12.83	109.1	130	1770				
SKM28B	10	10.28	136.2	100	1670				
SKM28B	7.5	7.61	184	80	1510				

SKM 38..减速机组合表（n_1 =1400r/min）
SKM 38..Possible geometrical combinations (n_1 =1400r/min)

200Nm

减速机型号 Gear units	i 公称 Nominal	i 实际 Actual	n_2 [r/min]	M_{2max} [Nm]	F_{r2} [N]	MV63	MV71	MV80	MV90
3级/Stage									
SKM38C	300	302.36	4.6	200	4800				
SKM38C	250	255.39	5.5	200	4800				
SKM38C	200	204.54	6.8	180	4800				
SKM38C	150	149.26	9.4	200	4650				
SKM38C	125	127.41	11	180	4330				
SKM38C	100	102.04	13.7	150	4070				
SKM38C	75	74.46	18.8	110	3650				
2级/Stage									
SKM38B	60	59.55	23.5	200	3430				
SKM38B	50	50.30	27.8	200	3190				
SKM38B	40	40.29	34.7	180	2970				
SKM38B	30	29.40	47.6	200	2720				
SKM38B	25	25.10	55.8	180	2530				
SKM38B	20	20.10	69.7	150	2380				
SKM38B	15	14.67	95.4	110	2130				
SKM38B	12.5	12.83	109.1	180	2030				
SKM38B	10	10.28	136.2	150	1910				
SKM38B	7.5	7.50	186.7	110	1710				

减速机选型表 / GEAR UNIT SELECTION TABLES

SKM 48..减速机组合表 (n_1 =1400r/min)
SKM 48..Possible geometrical combinations (n_1 =1400r/min)

350Nm

减速机型号 Gear units	i 公称 Nominal	i 实际 Actual	n_2 [r/min]	M_{2max} [Nm]	F_{r2} [N]	MV63	MV71	MV80	MV90	MV100	MV112
3级/Stage											
SKM48C	300	302.72	4.6	350	6500						
SKM48C	250	255.69	5.5	350	6500						
SKM48C	200	204.78	6.8	300	6500						
SKM48C	150	149.44	9.4	350	6500						
SKM48C	125	127.56	11	300	5980						
SKM48C	100	102.16	13.7	240	5520						
SKM48C	75	74.55	18.8	200	5040						
2级/Stage											
SKM48B	60	59.55	23.5	350	4660						
SKM48B	50	50.30	27.8	350	4340						
SKM48B	40	40.29	34.7	300	4080						
SKM48B	30	29.40	47.6	350	3720						
SKM48B	25	25.10	55.8	300	3500						
SKM48B	20	20.10	69.7	240	3230						
SKM48B	15	14.67	95.4	200	2950						
SKM48B	12.5	12.83	109.1	300	2770						
SKM48B	10	10.28	136.2	240	2550						
SKM48B	7.5	7.50	186.7	200	2330						

SKM 58..减速机组合表 (n_1 =1400r/min)
SKM 58..Possible geometrical combinations (n_1 =1400r/min)

500Nm

减速机型号 Gear units	i 公称 Nominal	i 实际 Actual	n_2 [r/min]	M_{2max} [Nm]	F_{r2} [N]	MV63	MV71	MV80	MV90	MV100	MV112
3级/Stage											
SKM58C	300	303.73	4.6	500	8300						
SKM58C	250	256.55	5.5	500	8300						
SKM58C	200	205.47	6.8	480	8300						
SKM58C	150	149.94	9.3	500	8050						
SKM58C	125	127.98	11	480	7580						
SKM58C	100	102.50	13.7	380	7000						
SKM58C	75	74.80	18.7	300	6390						
2级/Stage											
SKM58B	60	59.55	23.5	500	5890						
SKM58B	50	50.30	27.8	500	5500						
SKM58B	40	40.29	34.7	480	5170						
SKM58B	30	29.40	47.6	500	4710						
SKM58B	25	25.10	55.8	480	4430						
SKM58B	20	20.10	69.7	380	4090						
SKM58B	15	14.67	95.4	300	3730						
SKM58B	12.5	12.83	109.1	480	3510						
SKM58B	10	10.28	136.2	380	3240						
SKM58B	7.5	7.50	186.7	300	2950						

匡城传动 SHKCJX
传动装置**专业制造商**
PROFESSIONAL MANUFACTURER OF TRANSMISSION DEVICE
SKM系列
品牌源于匡城　口碑自然来　www.shkcjx.com

减速机选型表 / GEAR UNIT SELECTION TABLES

SKM.. 性能参数 / Performance parameter

P_{1n} [kW]	n_2 [r/min]	M_{2n} [Nm]	i 公称 Nominal	i 实际 Actual	F_{r2} [N]	fs				Page
0.12	4.6	215	300	303.19	4100	0.60	**SKM28C**	**63B5**	**6314**	31
	5.5	180	250	256.09	4100	0.72				
	6.8	148	200	205.11	4100	0.88				
	9.2	108	150	151.82	4000	1.2				
	11	89	125	127.76	3770	1.5				
	13.7	74	100	102.32	3560	1.3				
	18.5	55	75	75.74	3220	1.5				
	23.5	44	60	59.55	2960	3.0	**SKM28B**	**63B5**	**6314**	31
	27.8	37	50	50.30	2790	3.5				
	34.7	30	40	40.29	2610	4.3				
	46.9	22	30	29.82	2350	5.9				
	55.8	18.1	25	25.10	2200	7.2				
	69.7	15.2	20	20.10	2080	6.6				
	94.1	11.2	15	14.88	1880	7.1				
	109.1	9.4	12.5	12.83	1770	13.8				
	136.2	7.9	10	10.28	1670	12.7				
	184	5.8	7.5	7.61	1510	13.7				
	4.6	223	300	302.36	4800	0.90	**SKM38C**	**63B5**	**6314**	32
	5.5	179	250	255.39	4800	1.1				
	6.8	145	200	204.54	4800	1.2				
	9.4	112	150	149.26	4650	1.8				
	11	90	125	127.41	4330	2.0				
	13.7	75	100	102.04	4070	2.0				
	18.8	54	75	74.46	3650	2.0				
	23.5	46	60	59.55	3430	4.4	**SKM38B**	**63B5**	**6314**	32
	27.8	37	50	50.30	3190	5.5				
	34.7	30	40	40.29	2970	6.1				
	47.6	23	30	29.40	2720	8.8				
	4.6	219	300	302.72	6500	1.6	**SKM48C**	**63B5**	**6314**	33
	5.5	177	250	255.69	6500	2.0				
	6.8	148	200	204.78	6500	2.0				
	9.4	111	150	149.44	6500	3.1				
	11	93	125	127.56	5980	3.2				
	13.7	73	100	102.16	5520	3.3				
	18.8	56	75	74.55	5040	3.6				
	4.6	217	300	303.73	8300	2.3	**SKM58C**	**63B5**	**6314**	34
	5.5	177	250	256.55	8300	2.8				
	6.8	148	200	205.47	8300	3.2				
	9.3	111	150	149.94	8050	4.5				
0.18	9.2	161	300	303.19	4000	0.81	**SKM28C**	**63B5**	**6312**	31
	10.9	135	250	256.09	3790	0.96				
	13.7	111	200	205.11	3550	1.2				
	18.4	81	150	151.82	3200	1.6				
	21.9	66	125	127.76	2990	2.0				
	27.4	56	100	102.32	2820	1.8				
	37	41	75	75.74	2550	1.9				
	11	133	125	127.76	3770	0.98	**SKM28C**	**63B5**	**6324**	31
	13.7	112	100	102.32	3560	0.90				
	18.5	82	75	75.74	3220	0.97				

P_{1n} [kW]	n_2 [r/min]	M_{2n} [Nm]	i 公称 Nominal	i 实际 Actual	F_{r2} [N]	fs				Page
0.18	23.5	66	60	59.55	2960	2.0	**SKM28B**	**63B5**	**6324**	31
	27.8	55	50	50.30	2790	2.4				
	34.7	45	40	40.29	2610	2.9				
	46.9	33	30	29.82	2350	3.9				
	55.8	27	25	25.10	2200	4.8				
	69.7	23	20	20.10	2080	4.4				
	94.1	16.9	15	14.88	1880	4.7				
	15.1	103	60	59.55	3430	1.3	**SKM28B**	**71B5/B14**	**7116**	31
	17.9	86	50	50.30	3240	1.5				
	22.3	70	40	40.29	3030	1.8				
	30.2	52	30	29.82	2730	2.5				
	35.9	42	25	25.10	2550	3.1				
	44.8	36	20	20.10	2410	2.8				
	60.5	26	15	14.88	2180	3.1				
	70.1	22	12.5	12.83	2050	5.9				
	87.5	18.4	10	10.28	1930	5.4				
	118.4	13.6	7.5	7.61	1750	5.9				
	9.3	167	300	302.36	4650	1.2	**SKM38C**	**63B5**	**6312**	32
	11	135	250	255.39	4330	1.5				
	13.7	109	200	204.54	4030	1.7				
	18.8	84	150	149.26	3690	2.4				
	22	68	125	127.41	3440	2.7				
	27.4	56	100	102.04	3230	2.7				
	37.6	41	75	74.46	2900	2.7				
	6.8	217	200	204.54	4800	0.83	**SKM38C**	**63B5**	**6324**	32
	9.4	167	150	149.26	4650	1.2				
	11	135	125	127.41	4330	1.3				
	13.7	112	100	102.04	4070	1.3				
	18.8	81	75	74.46	3650	1.4				
	23.5	68	60	59.55	3430	2.9	**SKM38B**	**63B5**	**6324**	32
	27.8	55	50	50.30	3190	3.6				
	34.7	44	40	40.29	2970	4.1				
	7.1	210	125	127.41	4800	0.86	**SKM38C**	**71B5/B14**	**7116**	32
	8.8	174	100	102.04	4720	0.86				
	12.1	126	75	74.46	4230	0.87				
	15.1	106	60	59.55	3970	1.9	**SKM38B**	**71B5/B14**	**7116**	32
	17.9	86	50	50.30	3690	2.3				
	22.3	69	40	40.29	3440	2.6				
	30.6	53	30	29.40	3150	3.8				
	35.9	43	25	25.10	2930	4.2				
	44.8	36	20	20.10	2760	4.2				
	61.3	26	15	14.67	2470	4.3				
	9.2	164	300	302.72	6320	2.1	**SKM48C**	**63B5**	**6312**	33
	11	133	250	255.69	5890	2.6				
	13.7	111	200	204.78	5540	2.7				
	18.7	84	150	149.44	5040	4.2				
	4.6	328	300	302.72	6500	1.1	**SKM48C**	**63B5**	**6324**	33
	5.5	266	250	255.69	6500	1.3				
	6.8	222	200	204.78	6500	1.4				
	9.4	167	150	149.44	6500	2.1				
	11	139	125	127.56	5980	2.2				
	13.7	110	100	102.16	5520	2.2				
	18.8	83	75	74.55	5040	2.4				

匡城传动 SHKCJX
传动装置**专业制造商**
PROFESSIONAL MANUFACTURER OF TRANSMISSION DEVICE
SKM系列
品牌源于匡城　口碑自然来　www.shkcjx.com

P_{1n} [kW]	n_2 [r/min]	M_{2n} [Nm]	i 公称 Nominal	i 实际 Actual	F_{r2} [N]	fs				Page
0.18	3.5	414	250	255.69	6500	0.85	**SKM48C**	**71B5/B14**	**7116**	33
	4.4	345	200	204.78	6500	0.87				
	6.0	260	150	149.44	6500	1.3				
	7.1	217	125	127.56	6500	1.4				
	8.8	171	100	102.16	6400	1.4				
	12.1	130	75	74.55	5840	1.5				
	15.1	104	60	59.55	5390	3.4	**SKM48B**	**71B5/B14**	**7116**	33
	17.9	85	50	50.30	5030	4.1				
	22.3	71	40	40.29	4730	4.3				
	9.2	163	300	303.73	7990	3.1	**SKM58C**	**63B5**	**6312**	34
	10.9	133	250	256.55	7470	3.8				
	13.6	111	200	205.47	7030	4.3				
	4.6	326	300	303.73	8300	1.5	**SKM58C**	**63B5**	**6324**	34
	5.5	266	250	256.55	8300	1.9				
	6.8	222	200	205.47	8300	2.2				
	9.3	167	150	149.94	8050	3.0				
	11	139	125	127.98	7580	3.4				
	13.7	110	100	102.50	7000	3.5				
	18.7	83	75	74.80	6390	3.6				
	3.0	507	300	303.73	8300	0.99	**SKM58C**	**71B5/B14**	**7116**	34
	3.5	414	250	256.55	8300	1.2				
	4.4	345	200	205.47	8300	1.4				
	6.0	260	150	149.94	8300	1.9				
	7.0	217	125	127.98	8300	2.2				
	8.8	171	100	102.50	8110	2.2				
	12.0	130	75	74.80	7400	2.3				
0.25	18.4	113	150	151.82	3200	1.2	**SKM28C**	**63B5**	**6322**	31
	21.9	92	125	127.76	2990	1.4				
	27.4	78	100	102.32	2820	1.3				
	37	57	75	75.74	2550	1.4				
	23.5	92	60	59.55	2960	1.4	**SKM28B**	**71B5/B14**	**7114**	31
	27.8	77	50	50.30	2790	1.7				
	34.7	63	40	40.29	2610	2.1				
	46.9	46	30	29.82	2350	2.8				
	55.8	38	25	25.10	2200	3.4				
	69.7	32	20	20.10	2080	3.2				
	94.1	23	15	14.88	1880	3.4				
	15.1	142	60	59.55	3430	0.91	**SKM28B**	**71B5/B14**	**7126**	31
	17.9	119	50	50.30	3240	1.1				
	22.3	98	40	40.29	3030	1.3				
	30.2	72	30	29.82	2730	1.8				
	35.9	59	25	25.10	2550	2.2				
	44.8	49	20	20.10	2410	2.0				
	60.5	36	15	14.88	2180	2.2				
	70.1	30	12.5	12.83	2050	4.3				
	87.5	26	10	10.28	1930	3.9				
	118.4	18.9	7.5	7.61	1750	4.2				

P_{1n} [kW]	n_2 [r/min]	M_{2n} [Nm]	i 公称 Nominal	i 实际 Actual	F_{r2} [N]	fs				Page
0.25	9.3	232	300	302.36	4650	0.86	**SKM38C**	**63B5**	**6322**	32
	11	187	250	255.39	4330	1.1				
	13.7	151	200	204.54	4030	1.2				
	18.8	116	150	149.26	3690	1.7				
	22	94	125	127.41	3440	1.9				
	27.4	78	100	102.04	3230	1.9				
	37.6	56	75	74.46	2900	2.0				
	9.4	233	150	149.26	4650	0.86	**SKM38C**	**71B5/B14**	**7114**	32
	11	188	125	127.41	4330	0.96				
	13.7	155	100	102.04	4070	0.97				
	18.8	113	75	74.46	3650	0.98				
	23.5	95	60	59.55	3430	2.1	**SKM38B**	**71B5/B14**	**7114**	32
	27.8	76	50	50.30	3190	2.6				
	34.7	62	40	40.29	2970	2.9				
	47.6	48	30	29.40	2720	4.2				
	15.1	148	60	59.55	3970	1.4	**SKM38B**	**71B5/B14**	**7126**	32
	17.9	119	50	50.30	3690	1.7				
	22.3	96	40	40.29	3440	1.9				
	30.6	74	30	29.40	3150	2.7				
	35.9	60	25	25.10	2930	3.0				
	44.8	49	20	20.10	2760	3.0				
	61.3	36	15	14.67	2470	3.1				
	9.3	228	300	302.72	6320	1.5	**SKM48C**	**63B5**	**6322**	33
	11	185	250	255.69	5890	1.9				
	13.7	154	200	204.78	5540	1.9				
	18.8	116	150	149.44	5040	3.0				
	22	97	125	127.56	4750	3.1				
	27.4	76	100	102.16	4380	3.2				
	37.6	58	75	74.55	4000	3.5				
	5.5	370	250	255.69	6500	0.95	**SKM48C**	**71B5/B14**	**7114**	33
	6.8	308	200	204.78	6500	0.97				
	9.4	232	150	149.44	6500	1.5				
	11	193	125	127.56	5980	1.6				
	13.7	152	100	102.16	5520	1.6				
	18.8	116	75	74.55	5040	1.7				
	23.5	93	60	59.55	4660	3.8	**SKM48B**	**71B5/B14**	**7114**	33
	27.8	76	50	50.30	4340	4.6				
	6.0	361	150	149.44	6500	0.97	**SKM48C**	**71B5/B14**	**7126**	33
	7.1	301	125	127.56	6500	1.00				
	8.8	237	100	102.16	6400	1.0				
	12.1	180	75	74.55	5840	1.1				
	15.1	145	60	59.55	5390	2.4	**SKM48B**	**71B5/B14**	**7126**	33
	17.9	118	50	50.30	5030	3.0				
	22.3	98	40	40.29	4730	3.1				
	9.2	227	300	303.73	7990	2.2	**SKM58C**	**63B5**	**6322**	34
	10.9	185	250	256.55	7470	2.7				
	13.6	154	200	205.47	7030	3.1				
	18.7	116	150	149.94	6390	4.3				
	4.6	453	300	303.73	8300	1.1	**SKM58C**	**71B5/B14**	**7114**	34
	5.5	370	250	256.55	8300	1.4				

匡城传动 SHKCJX
传动装置**专业制造商**
PROFESSIONAL MANUFACTURER OF TRANSMISSION DEVICE
SKM系列
品牌源于匡城 口碑自然来 www.shkcjx.com

P_{1n} [kW]	n_2 [r/min]	M_{2n} [Nm]	i 公称 Nominal	i 实际 Actual	F_{r2} [N]	fs				Page
0.25	6.8	308	200	205.47	8300	1.6	**SKM58C**	**71B5/B14**	**7114**	34
	9.3	232	150	149.94	8050	2.2				
	11	193	125	127.98	7580	2.5				
	13.7	152	100	102.50	7000	2.5				
	18.7	116	75	74.80	6390	2.6				
	3.0	705	300	303.73	8300	0.71	**SKM58C**	**71B5/B14**	**7126**	34
	3.5	575	250	256.55	8300	0.87				
	4.4	479	200	205.47	8300	1.0				
	6.0	361	150	149.94	8300	1.4				
	7.0	301	125	127.98	8300	1.6				
	8.8	237	100	102.50	8110	1.6				
	12.0	180	75	74.80	7400	1.7				
	15.1	144	60	59.55	6820	3.5	**SKM58B**	**71B5/B14**	**7126**	34
	17.9	118	50	50.30	6370	4.3				
	21.9	137	125	127.76	2990	0.95	**SKM28C**	**71B5/B14**	**7112**	31
	27.4	115	100	102.32	2820	0.87				
	37	85	75	75.74	2550	0.94				
	23.5	136	60	59.55	2960	0.96	**SKM28B**	**71B5/B14**	**7124**	31
	27.8	113	50	50.30	2790	1.1				
	34.7	93	40	40.29	2610	1.4				
	46.9	68	30	29.82	2350	1.9				
	55.8	56	25	25.10	2200	2.3				
	69.7	47	20	20.10	2080	2.1				
	94.1	35	15	14.88	1880	2.3				
	109.1	29	12.5	12.83	1770	4.5				
	136.2	24	10	10.28	1670	4.1				
	184	17.9	7.5	7.61	1510	4.5				
0.37	22.3	145	40	40.29	3030	0.90	**SKM28B**	**80B5/B14**	**8016**	31
	30.2	106	30	29.82	2730	1.2				
	35.9	87	25	25.10	2550	1.5				
	44.8	73	20	20.10	2410	1.4				
	60.5	54	15	14.88	2180	1.5				
	70.1	45	12.5	12.83	2050	2.9				
	87.5	38	10	10.28	1930	2.6				
	118.4	28	7.5	7.61	1750	2.9				
	18.8	172	150	149.26	3690	1.2	**SKM38C**	**71B5/B14**	**7112**	32
	22	139	125	127.41	3440	1.3				
	27.4	115	100	102.04	3230	1.3				
	37.6	83	75	74.46	2900	1.3				
	23.5	140	60	59.55	3430	1.4	**SKM38B**	**71B5/B14**	**7124**	32
	27.8	113	50	50.30	3190	1.8				
	34.7	91	40	40.29	2970	2.0				
	47.6	70	30	29.40	2720	2.8				
	55.8	57	25	25.10	2530	3.2				
	69.7	47	20	20.10	2380	3.2				
	95.4	34	15	14.67	2130	3.2				

P_{1n} [kW]	n_2 [r/min]	M_{2n} [Nm]	i 公称 Nominal	i 实际 Actual	F_{r2} [N]	fs				Page
0.37	15.1	219	60	59.55	3970	0.92	**SKM38B**	**80B5/B14**	**8016**	32
	17.9	176	50	50.30	3690	1.1				
	22.3	142	40	40.29	3440	1.3				
	30.6	109	30	29.40	3150	1.8				
	35.9	88	25	25.10	2930	2.0				
	44.8	73	20	20.10	2760	2.1				
	61.3	53	15	14.67	2470	2.1				
	70.1	46	12.5	12.83	2360	3.9				
	87.5	38	10	10.28	2210	4.0				
	120	27	7.5	7.50	1990	4.0				
	9.3	338	300	302.72	6320	1.0	**SKM48C**	**71B5/B14**	**7112**	33
	11	274	250	255.69	5890	1.3				
	13.7	228	200	204.78	5540	1.3				
	18.8	172	150	149.44	5040	2.0				
	22	143	125	127.56	4750	2.1				
	27.4	113	100	102.16	4380	2.1				
	37.6	86	75	74.55	4000	2.3				
	9.4	343	150	149.44	6500	1.0	**SKM48C**	**71B5/B14**	**7124**	33
	11	286	125	127.56	5980	1.0				
	13.7	225	100	102.16	5520	1.1				
	18.8	171	75	74.55	5040	1.2				
	23.5	138	60	59.55	4660	2.5	**SKM48B**	**71B5/B14**	**7124**	33
	27.8	112	50	50.30	4340	3.1				
	34.7	93	40	40.29	4080	3.2				
	15.1	215	60	59.55	5390	1.6	**SKM48B**	**80B5/B14**	**8016**	33
	17.9	174	50	50.30	5030	2.0				
	22.3	145	40	40.29	4730	2.1				
	30.6	109	30	29.40	4310	3.2				
	35.9	91	25	25.10	4050	3.3				
	44.8	72	20	20.10	3740	3.3				
	61.3	55	15	14.67	3410	3.7				
	9.2	335	300	303.73	7990	1.5	**SKM58C**	**71B5/B14**	**7112**	34
	10.9	274	250	256.55	7470	1.8				
	13.6	228	200	205.47	7030	2.1				
	18.7	172	150	149.94	6390	2.9				
	21.9	143	125	127.98	6010	3.4				
	27.3	113	100	102.50	5550	3.4				
	37.4	86	75	74.80	5070	3.5				
	4.6	671	300	303.73	8300	0.75	**SKM58C**	**71B5/B14**	**7124**	34
	5.5	547	250	256.55	8300	0.91				
	6.8	456	200	205.47	8300	1.1				
	9.3	343	150	149.94	8050	1.5				
	11	286	125	127.98	7580	1.7				
	13.7	225	100	102.50	7000	1.7				
	18.7	171	75	74.80	6390	1.8				

匡城传动 SHKCJX
传动装置**专业制造商**
PROFESSIONAL MANUFACTURER OF TRANSMISSION DEVICE
SKM系列
品牌源于匡城 口碑自然来 www.shkcjx.com

P_{1n} [kW]	n_2 [r/min]	M_{2n} [Nm]	i 公称 Nominal	i 实际 Actual	F_{r2} [N]	fs				Page
0.37	23.5	137	60	59.55	5890	3.6	**SKM58B**	**71B5/B14**	**7124**	34
	27.8	112	50	50.30	5500	4.5				
	6.0	534	150	149.94	8300	0.94	**SKM58C**	**80B5/B14**	**8016**	34
	7.0	445	125	127.98	8300	1.1				
	8.8	351	100	102.50	8110	1.1				
	12.0	267	75	74.80	7400	1.1				
	15.1	213	60	59.55	6820	2.3	**SKM58B**	**80B5/B14**	**8016**	34
	17.9	174	50	50.30	6370	2.9				
	22.3	145	40	40.29	6000	3.3				
	34.7	138	40	40.29	2610	0.94	**SKM28B**	**80B5/B14**	**8014**	31
	46.9	101	30	29.82	2350	1.3				
	55.8	83	25	25.10	2200	1.6				
	69.7	70	20	20.10	2080	1.4				
	94.1	51	15	14.88	1880	1.6				
	109.1	43	12.5	12.83	1770	3.0				
	136.2	36	10	10.28	1670	2.8				
	184	27	7.5	7.61	1510	3.0				
	35.9	129	25	25.10	2550	1.0	**SKM28B**	**80B5/B14**	**8026**	31
	44.8	109	20	20.10	2410	0.92				
	60.5	80	15	14.88	2180	1.00				
	70.1	67	12.5	12.83	2050	1.9				
	87.5	56	10	10.28	1930	1.8				
	118.4	42	7.5	7.61	1750	1.9				
0.55	22	206	125	127.41	3440	0.87	**SKM38C**	**71B5/B14**	**7122**	32
	27.4	171	100	102.04	3230	0.88				
	37.6	124	75	74.46	2900	0.89				
	23.5	209	60	59.55	3430	0.96	**SKM38B**	**80B5/B14**	**8014**	32
	27.8	168	50	50.30	3190	1.2				
	34.7	136	40	40.29	2970	1.3				
	47.6	105	30	29.40	2720	1.9				
	55.8	84	25	25.10	2530	2.1				
	69.7	70	20	20.10	2380	2.1				
	95.4	51	15	14.67	2130	2.2				
	109.1	44	12.5	12.83	2030	4.1				
	136.2	36	10	10.28	1910	4.1				
	186.7	26	7.5	7.50	1710	4.2				
	22.3	211	40	40.29	3440	0.85	**SKM38B**	**80B5/B14**	**8026**	32
	30.6	163	30	29.40	3150	1.2				
	35.9	131	25	25.10	2930	1.4				
	44.8	109	20	20.10	2760	1.4				
	61.3	79	15	14.67	2470	1.4				
	70.1	68	12.5	12.83	2360	2.6				
	87.5	56	10	10.28	2210	2.7				
	120	41	7.5	7.50	1990	2.7				

P_{1n} [kW]	n_2 [r/min]	M_{2n} [Nm]	i 公称 Nominal	i 实际 Actual	F_{r2} [N]	fs				Page
	11	407	250	255.69	5890	0.86	**SKM48C**	**71B5/B14**	**7122**	33
	13.7	339	200	204.78	5540	0.89				
	18.8	255	150	149.44	5040	1.4				
	22	213	125	127.56	4750	1.4				
	27.4	168	100	102.16	4380	1.4				
	37.6	127	75	74.55	4000	1.6				
	18.8	255	75	74.55	5040	0.79	**SKM48C**	**80B5/B14**	**8014**	33
	23.5	205	60	59.55	4660	1.7	**SKM48B**	**80B5/B14**	**8014**	33
	27.8	166	50	50.30	4340	2.1				
	34.7	139	40	40.29	4080	2.2				
	47.6	104	30	29.40	3720	3.4				
	55.8	87	25	25.10	3500	3.5				
	69.7	68	20	20.10	3230	3.5				
	95.4	52	15	14.67	2950	3.8				
	15.1	319	60	59.55	5390	1.1	**SKM48B**	**80B5/B14**	**8026**	33
	17.9	259	50	50.30	5030	1.4				
	22.3	215	40	40.29	4730	1.4				
	30.6	162	30	29.40	4310	2.2				
	35.9	135	25	25.10	4050	2.2				
	44.8	107	20	20.10	3740	2.3				
	61.3	81	15	14.67	3410	2.5				
0.55	9.2	498	300	303.73	7990	1.0	**SKM58C**	**71B5/B14**	**7122**	34
	10.9	407	250	256.55	7470	1.2				
	13.6	339	200	205.47	7030	1.4				
	18.7	255	150	149.94	6390	2.0				
	21.9	213	125	127.98	6010	2.3				
	27.3	168	100	102.50	5550	2.3				
	37.4	127	75	74.80	5070	2.4				
	9.3	511	150	149.94	8050	0.98	**SKM58C**	**80B5/B14**	**8014**	34
	11	425	125	127.98	7580	1.1				
	13.7	335	100	102.50	7000	1.1				
	18.7	255	75	74.80	6390	1.2				
	23.5	204	60	59.55	5890	2.5	**SKM58B**	**80B5/B14**	**8014**	34
	27.8	166	50	50.30	5500	3.0				
	34.7	139	40	40.29	5170	3.5				
	47.6	104	30	29.40	4710	4.8				
	15.1	317	60	59.55	6820	1.6	**SKM58B**	**80B5/B14**	**8026**	34
	17.9	259	50	50.30	6370	1.9				
	22.3	215	40	40.29	6000	2.2				
	30.6	162	30	29.40	5460	3.1				
	35.9	135	25	25.10	5130	3.5				
	44.8	107	20	20.10	4740	3.6				
	61.3	81	15	14.67	4330	3.7				

匡城传动 SHKCJX
传动装置**专业制造商**
PROFESSIONAL MANUFACTURER OF TRANSMISSION DEVICE
SKM系列
品牌源于匡城 口碑自然来 www.shkcjx.com

P_{1n} [kW]	n_2 [r/min]	M_{2n} [Nm]	i 公称 Nominal	i 实际 Actual	F_{r2} [N]	fs				Page
	46.9	138	30	29.82	2350	0.94	**SKM28B**	**80B5/B14**	**8024**	31
	55.8	113	25	25.10	2200	1.1				
	69.7	95	20	20.10	2080	1.1				
	94.1	70	15	14.88	1880	1.1				
	109.1	59	12.5	12.83	1770	2.2				
	136.2	49	10	10.28	1670	2.0				
	184	36	7.5	7.61	1510	2.2				
	70.1	91	12.5	12.83	2050	1.4	**SKM28B**	**90B5/B14**	**90S6**	31
	87.5	77	10	10.28	1930	1.3				
	118.4	57	7.5	7.61	1750	1.4				
	27.8	229	50	50.30	3190	0.87	**SKM38B**	**80B5/B14**	**8024**	32
	34.7	185	40	40.29	2970	0.97				
	47.6	143	30	29.40	2720	1.4				
	55.8	115	25	25.10	2530	1.6				
	69.7	95	20	20.10	2380	1.6				
	95.4	69	15	14.67	2130	1.6				
	109.1	60	12.5	12.83	2030	3.0				
	136.2	49	10	10.28	1910	3.0				
	186.7	36	7.5	7.50	1710	3.1				
	30.6	222	30	29.40	3150	0.90	**SKM38B**	**90B5/B14**	**90S6**	32
	35.9	179	25	25.10	2930	1.0				
	44.8	148	20	20.10	2760	1.0				
0.75	61.3	107	15	14.67	2470	1.0				
	70.1	93	12.5	12.83	2360	1.9				
	87.5	77	10	10.28	2210	2.0				
	120	56	7.5	7.50	1990	2.0				
	18.7	348	150	149.44	5040	1.0	**SKM48C**	**80B5/B14**	**8012**	33
	22	290	125	127.56	4750	1.0				
	27.4	228	100	102.16	4380	1.1				
	37.6	174	75	74.55	4000	1.2				
	23.5	280	60	59.55	4660	1.3	**SKM48B**	**80B5/B14**	**8024**	33
	27.8	227	50	50.30	4340	1.5				
	34.7	189	40	40.29	4080	1.6				
	47.6	142	30	29.40	3720	2.5				
	55.8	119	25	25.10	3500	2.5				
	69.7	93	20	20.10	3230	2.6				
	95.4	71	15	14.67	2950	2.8				
	17.9	353	50	50.30	5030	0.99	**SKM48B**	**90B5/B14**	**90S6**	33
	22.3	294	40	40.29	4730	1.0				
	30.6	221	30	29.40	4310	1.6				
	35.9	184	25	25.10	4050	1.6				
	44.8	145	20	20.10	3740	1.7				
	61.3	110	15	14.67	3410	1.8				
	70.1	91	12.5	12.83	3210	3.3				
	87.5	72	10	10.28	2960	3.3				
	120	55	7.5	7.50	2700	3.7				

P_{1n} [kW]	n_2 [r/min]	M_{2n} [Nm]	i 公称 Nominal	i 实际 Actual	F_{r2} [N]	fs				Page
0.75	10.9	555	250	256.55	7470	0.90	**SKM58C**	**80B5/B14**	**8012**	34
	13.6	462	200	205.47	7030	1.0				
	18.7	348	150	149.94	6390	1.4				
	21.9	290	125	127.98	6010	1.7				
	27.3	228	100	102.50	5550	1.7				
	37.4	174	75	74.80	5070	1.7				
	11	580	125	127.98	7580	0.83	**SKM58C**	**80B5/B14**	**8024**	34
	13.7	457	100	102.50	7000	0.83				
	18.7	347	75	74.80	6390	0.86				
	23.5	278	60	59.55	5890	1.8	**SKM58B**	**80B5/B14**	**8024**	34
	27.8	227	50	50.30	5500	2.2				
	34.7	189	40	40.29	5170	2.5				
	47.6	142	30	29.40	4710	3.5				
	55.8	119	25	25.10	4430	4.0				
	69.7	93	20	20.10	4090	4.1				
	95.4	71	15	14.67	3730	4.2				
	15.1	432	60	59.55	6820	1.2	**SKM58B**	**90B5/B14**	**90S6**	34
	17.9	353	50	50.30	6370	1.4				
	22.3	294	40	40.29	6000	1.6				
	30.6	221	30	29.40	5460	2.3				
	35.9	184	25	25.10	5130	2.6				
	44.8	145	20	20.10	4740	2.6				
	61.3	110	15	14.67	4330	2.7				
1.1	109.1	86	12.5	12.83	1770	1.5	**SKM28B**	**90B5/B14**	**90S4**	31
	136.2	72	10	10.28	1670	1.4				
	184	53	7.5	7.61	1510	1.5				
	70.1	134	12.5	12.83	2050	0.97	**SKM28B**	**90B5/B14**	**90L6**	31
	87.5	112	10	10.28	1930	0.89				
	118.4	83	7.5	7.61	1750	0.96				
	47.6	209	30	29.40	2720	0.96	**SKM38B**	**90B5/B14**	**90S4**	32
	55.8	169	25	25.10	2530	1.1				
	69.7	140	20	20.10	2380	1.1				
	95.4	101	15	14.67	2130	1.1				
	109.1	87	12.5	12.83	2030	2.1				
	136.2	72	10	10.28	1910	2.1				
	186.7	52	7.5	7.50	1710	2.1				
	70.1	136	12.5	12.83	2360	1.3	**SKM38B**	**90B5/B14**	**90L6**	32
	87.5	113	10	10.28	2210	1.3				
	120	82	7.5	7.50	1990	1.3				
	23.5	410	60	59.55	4660	0.85	**SKM48B**	**90B5/B14**	**90S4**	33
	27.8	333	50	50.30	4340	1.1				
	34.7	277	40	40.29	4080	1.1				
	47.6	209	30	29.40	3720	1.7				
	55.8	174	25	25.10	3500	1.7				
	69.7	137	20	20.10	3230	1.8				
	95.4	104	15	14.67	2950	1.9				
	109.1	86	12.5	12.83	2770	3.5				
	136.2	68	10	10.28	2550	3.5				
	186.7	52	7.5	7.50	2330	3.9				

P_{1n} [kW]	n_2 [r/min]	M_{2n} [Nm]	i 公称 Nominal	i 实际 Actual	F_{r2} [N]	fs				Page
1.1	30.6	325	30	29.40	4310	1.1	**SKM48B**	**90B5/B14**	**90L6**	33
	35.9	271	25	25.10	4050	1.1				
	44.8	213	20	20.10	3740	1.1				
	61.3	162	15	14.67	3410	1.2				
	70.1	134	12.5	12.83	3210	2.2				
	87.5	106	10	10.28	2960	2.3				
	120	80	7.5	7.50	2700	2.5				
	18.7	511	150	149.94	6390	0.98	**SKM58C**	**80B5/B14**	**8022**	34
	21.9	425	125	127.98	6010	1.1				
	27.3	335	100	102.50	5550	1.1				
	37.4	255	75	74.80	5070	1.2				
	23.5	408	60	59.55	5890	1.2	**SKM58B**	**90B5/B14**	**90S4**	34
	27.8	333	50	50.30	5500	1.5				
	34.7	277	40	40.29	5170	1.7				
	47.6	209	30	29.40	4710	2.4				
	55.8	174	25	25.10	4430	2.8	**SKM58B**	**90B5/B14**	**90S4**	34
	69.7	137	20	20.10	4090	2.8				
	95.4	104	15	14.67	3730	2.9				
	15.1	634	60	59.55	6820	0.79	**SKM58B**	**90B5/B14**	**90L6**	34
	17.9	517	50	50.30	6370	0.97				
	22.3	431	40	40.29	6000	1.1				
	30.6	325	30	29.40	5460	1.5				
	35.9	271	25	25.10	5130	1.8				
	44.8	213	20	20.10	4740	1.8				
	61.3	162	15	14.67	4330	1.9				
	70.1	134	12.5	12.83	4060	3.6				
	87.5	106	10	10.28	3750	3.6				
	120	80	7.5	7.50	3420	3.7				
1.5	109.1	117	12.5	12.83	1770	1.1	**SKM28B**	**90B5/B14**	**90L4**	31
	136.2	99	10	10.28	1670	1.0				
	184	73	7.5	7.61	1510	1.1				
	55.8	230	25	25.10	2530	0.8	**SKM38B**	**90B5/B14**	**90L4**	31
	69.7	191	20	20.10	2380	0.79				
	95.4	138	15	14.67	2130	0.80				
	109.1	119	12.5	12.83	2030	1.5				
	136.2	99	10	10.28	1910	1.5				
	186.7	72	7.5	7.50	1710	1.5				
	27.8	454	50	50.30	4340	0.77	**SKM48B**	**90B5/B14**	**90L4**	33
	34.7	378	40	40.29	4080	0.79				
	47.6	285	30	29.40	3720	1.2				
	55.8	237	25	25.10	3500	1.3				
	69.7	187	20	20.10	3230	1.3				
	95.4	142	15	14.67	2950	1.4				
	109.1	118	12.5	12.83	2770	2.6				
	136.2	93	10	10.28	2550	2.6				
	186.7	70	7.5	7.50	2330	2.8				

P_{1n} [kW]	n_2 [r/min]	M_{2n} [Nm]	i 公称 Nominal	i 实际 Actual	F_{r2} [N]	fs				Page
1.5	44.8	291	20	20.10	3740	0.83	**SKM48B**	**100B5/B14**	**100L6**	33
	61.3	221	15	14.67	3410	0.91				
	70.1	183	12.5	12.83	3210	1.6				
	87.5	144	10	10.28	2960	1.7				
	120	110	7.5	7.50	2700	1.8				
	21.9	580	125	127.98	6010	0.83	**SKM58C**	**90B5/B14**	**90S2**	34
	27.3	457	100	102.50	5550	0.83				
	37.4	347	75	74.80	5070	0.86				
	23.5	556	60	59.55	5890	0.90	**SKM58B**	**90B5/B14**	**90L4**	34
	27.8	454	50	50.30	5500	1.1				
	34.7	378	40	40.29	5170	1.3				
	47.6	285	30	29.40	4710	1.8				
	55.8	237	25	25.10	4430	2.0				
	69.7	187	20	20.10	4090	2.0				
	95.4	142	15	14.67	3730	2.1				
	109.1	118	12.5	12.83	3510	4.1				
	136.2	93	10	10.28	3240	4.1				
	186.7	70	7.5	7.50	2950	4.3				
	30.6	443	30	29.40	5460	1.1	**SKM58B**	**100B5/B14**	**100L6**	34
	35.9	369	25	25.10	5130	1.3				
	44.8	291	20	20.10	4740	1.3				
	61.3	221	15	14.67	4330	1.4				
	70.1	183	12.5	12.83	4060	2.6				
	87.5	144	10	10.28	3750	2.6				
	120	110	7.5	7.50	3420	2.7				
2.2	47.6	418	30	29.40	3720	0.84	**SKM48B**	**100B5/B14**	**100LA4**	33
	55.8	348	25	25.10	3500	0.86				
	69.7	274	20	20.10	3230	0.88				
	95.4	208	15	14.67	2950	0.96				
	109.1	172	12.5	12.83	2770	1.7				
	136.2	136	10	10.28	2550	1.8				
	186.7	103	7.5	7.50	2330	1.9				
	70.1	268	12.5	12.83	3210	1.1	**SKM48B**	**112B5/B14**	**112M6**	33
	87.5	211	10	10.28	2960	1.1				
	120	161	7.5	7.50	2700	1.2				
	34.7	554	40	40.29	5170	0.87	**SKM58B**	**100B5/B14**	**100LA4**	34
	47.6	418	30	29.40	4710	1.2				
	55.8	348	25	25.10	4430	1.4				
	69.7	274	20	20.10	4090	1.4				
	95.4	208	15	14.67	3730	1.4				
	109.1	172	12.5	12.83	3510	2.8				
	136.2	136	10	10.28	3240	2.8				
	186.7	103	7.5	7.50	2950	2.9				
	35.9	541	25	25.10	5130	0.89	**SKM58B**	**112B5/B14**	**112M6**	34
	44.8	426	20	20.10	4740	0.89				
	61.3	324	15	14.67	4330	0.93				
	70.1	268	12.5	12.83	4060	1.8				
	87.5	211	10	10.28	3750	1.8				
	120	161	7.5	7.50	3420	1.9				

P_{1n} [kW]	n_2 [r/min]	M_{2n} [Nm]	i 公称 Nominal	i 实际 Actual	F_{r2} [N]	fs				Page
3	109.1	235	12.5	12.83	2770	1.3	**SKM48B**	**100B5/B14**	**100LB4**	33
	136.2	185	10	10.28	2550	1.3				
	186.7	141	7.5	7.50	2330	1.4				
	47.6	569	30	29.40	4710	0.88	**SKM58B**	**100B5/B14**	**100LB4**	34
	55.8	474	25	25.10	4430	1.0				
	69.7	374	20	20.10	4090	1.0				
	95.4	284	15	14.67	3730	1.1				
	109.1	235	12.5	12.83	3510	2.0				
	136.2	185	10	10.28	3240	2.1				
	186.7	141	7.5	7.50	2950	2.1				
4	109.1	314	12.5	12.83	2770	0.96	**SKM48B**	**112B5/B14**	**112M4**	33
	136.2	247	10	10.28	2550	0.97				
	186.7	188	7.5	7.50	2330	1.1				
	109.1	314	12.5	12.83	3510	1.5	**SKM58B**	**112B5/B14**	**112M4**	34
	136.2	247	10	10.28	3240	1.5				
	186.7	188	7.5	7.50	2950	1.6				

SKM.. HS性能参数 / Performance parameter

n_1=1400r/min

$M_{2\ max}$ [Nm]	n_2 [r/min]	i 公称 Nominal	i 实际 Actual	P_{1n} [kW]	F_{r2} [N]	F_{r1} [N]		Page
130	4.6	300	303.19	0.07	4100	400	**SKM28C..HS**	35
130	5.5	250	256.09	0.09	4100	400		
130	6.8	200	205.11	0.11	4100	400		
130	9.2	150	151.82	0.14	4000	400		
130	11	125	127.76	0.18	3770	400		
100	13.7	100	102.32	0.16	3560	400		
80	18.5	75	75.74	0.17	3220	400		
130	23.5	60	59.55	0.35	2960	400	**SKM28B..HS**	35
130	27.8	50	50.30	0.42	2790	400		
130	34.7	40	40.29	0.52	2610	400		
130	46.9	30	29.82	0.71	2350	400		
130	55.8	25	25.10	0.86	2200	400		
100	69.7	20	20.10	0.79	2080	400		
80	94.1	15	14.88	0.85	1880	400		
130	109.1	12.5	12.83	1.7	1770	400		
100	136.2	10	10.28	1.5	1670	400		
80	184	7.5	7.61	1.6	1510	400		
200	4.6	300	302.36	0.11	4800	400	**SKM38C..HS**	35
200	5.5	250	255.39	0.13	4800	400		
180	6.8	200	204.54	0.15	4800	400		
200	9.4	150	149.26	0.21	4650	400		
180	11	125	127.41	0.24	4330	400		
150	13.7	100	102.04	0.24	4070	400		
110	18.8	75	74.46	0.24	3650	400		
200	23.5	60	59.55	0.53	3430	530	**SKM38B..HS**	35
200	27.8	50	50.30	0.65	3190	530		
180	34.7	40	40.29	0.73	2970	530		
200	47.6	30	29.40	1.1	2720	530		
180	55.8	25	25.10	1.2	2530	530		
150	69.7	20	20.10	1.2	2380	530		
110	95.4	15	14.67	1.2	2130	530		
180	109.1	12.5	12.83	2.3	2030	530		
150	136.2	10	10.28	2.3	1910	530		
110	186.7	7.5	7.50	2.3	1710	530		
350	4.6	300	302.72	0.19	6500	560	**SKM48C..HS**	35
350	5.5	250	255.69	0.24	6500	560		
300	6.8	200	204.78	0.24	6500	560		
350	9.3	150	149.44	0.38	6500	560		
300	11	125	127.56	0.39	5980	560		
240	13.7	100	102.16	0.39	5520	560		
200	18.7	75	74.55	0.43	5040	560		

匡城传动 SHKCJX
传动装置**专业制造商**
PROFESSIONAL MANUFACTURER OF TRANSMISSION DEVICE
SKM系列
品牌源于匡城 口碑自然来 www.shkcjx.com

$M_{2\ max}$ [Nm]	n_2 [r/min]	i 公称 Nominal	i 实际 Actual	P_{1n} [kW]	F_{r2} [N]	F_{r1} [N]		Page
350	23.5	60	59.55	0.94	4660	860	**SKM48B..HS**	35
350	27.8	50	50.30	1.2	4340	860		
300	34.7	40	40.29	1.2	4080	860		
350	47.6	30	29.40	1.8	3720	860		
300	55.8	25	25.10	1.9	3500	860		
240	69.7	20	20.10	1.9	3230	860		
200	95.4	15	14.67	2.1	2950	860		
300	109.1	12.5	12.83	3.8	2770	860		
240	136.2	10	10.28	3.9	2550	860		
200	186.7	7.5	7.50	4.3	2330	860		
500	4.6	300	303.73	0.27	8300	560	**SKM58C..HS**	35
500	5.5	250	256.55	0.34	8300	560		
480	6.8	200	205.47	0.39	8300	560		
500	9.3	150	149.94	0.54	8050	560		
480	11	125	127.98	0.62	7580	560		
380	13.7	100	102.50	0.62	7000	560		
300	18.7	75	74.80	0.65	6390	560		
500	23.5	60	59.55	1.3	5890	1260	**SKM58B..HS**	35
500	27.8	50	50.30	1.7	5500	1260		
480	34.7	40	40.29	1.9	5170	1260		
500	47.6	30	29.40	2.6	4710	1260		
480	55.8	25	25.10	3.0	4430	1260		
380	69.7	20	20.10	3.1	4090	1260		
300	95.4	15	14.67	3.2	3730	1260		
480	109.1	12.5	12.83	6.1	3510	1260		
380	136.2	10	10.28	6.2	3240	1260		
300	186.7	7.5	7.50	6.4	2950	1260		

输入尺寸图表 / INPUT SIZE DIAGRAM

SKM..IEC 输入法兰尺寸/Input Flange Dimension

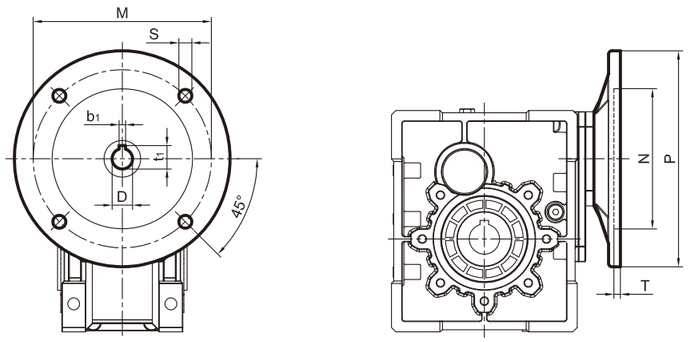

SKM	IEC接口						键槽/keyway		i(速比/ratio)																
	PAM-IEC	N	M	P	S	T	b1	t1	7.5	10	12.5	15	20	25	30	40	50	60	75	100	125	150	200	250	300
									D																
									B										C						
28	63B5	95	115	140	9	4	4	12.8	11	11	11	11	11	11	11	11	11	11	11	11	11	11	11	11	11
	71B5	110	130	160	9	5	5	16.3	14	14	14	14	14	14	14	14	14	14	14	14	14	–	–	–	–
	71B14	70	85	105	7	5	5	16.3	14	14	14	14	14	14	14	14	14	14	14	14	14	–	–	–	–
	80B5	130	165	200	11	5	6	21.8	19	19	19	19	19	19	19	19	19	19	–	–	–	–	–	–	–
	80B14	80	100	120	7	5	6	21.8	19	19	19	19	19	19	19	19	19	19	–	–	–	–	–	–	–
	90B5	130	165	200	11	5	8	27.3	24	24	24	24	24	24	24	–	–	–	–	–	–	–	–	–	–
	90B14	95	115	140	9	5	8	27.3	24	24	24	24	24	24	24	–	–	–	–	–	–	–	–	–	–
38	63B5	95	115	140	9	4	4	12.8	–	–	–	–	–	–	11	11	11	11	11	11	11	11	11	11	11
	71B5	110	130	160	9	5	5	16.3	–	–	–	14	14	14	14	14	14	14	14	14	14	–	–	–	–
	71B14	70	85	105	7	5	5	16.3	–	–	–	14	14	14	14	14	14	14	14	14	14	–	–	–	–
	80B5	130	165	200	11	5	6	21.8	19	19	19	19	19	19	19	19	19	19	–	–	–	–	–	–	–
	80B14	80	100	120	7	5	6	21.8	19	19	19	19	19	19	19	19	19	19	–	–	–	–	–	–	–
	90B5	130	165	200	11	5	8	27.3	24	24	24	24	24	24	24	24	24	–	–	–	–	–	–	–	–
	90B14	95	115	140	9	5	8	27.3	24	24	24	24	24	24	24	24	24	–	–	–	–	–	–	–	–
48	63B5	95	115	140	9	4	4	12.8	–	–	–	–	–	–	–	–	–	–	11	11	11	11	11	11	11
	71B5	110	130	160	9	5	5	16.3	–	–	–	–	–	–	–	14	14	14	14	14	14	14	14	14	14
	80B5	130	165	200	11	5	6	21.8	–	–	–	19	19	19	19	19	19	19	19	19	19	19	–	–	–
	80B14	80	100	120	7	5	6	21.8	–	–	–	19	19	19	19	19	19	19	19	19	19	19	–	–	–
	90B5	130	165	200	11	5	8	27.3	24	24	24	24	24	24	24	24	24	24	–	–	–	–	–	–	–
	90B14	95	115	140	9	5	8	27.3	24	24	24	24	24	24	24	24	24	24	–	–	–	–	–	–	–
	100/112B5	180	215	250	13	5	8	31.3	28	28	28	28	28	28	28/–	28/–	–	–	–	–	–	–	–	–	–
	100/112B14	110	130	160	9	5	8	31.3	28	28	28	28	28	28	28/–	28/–	–	–	–	–	–	–	–	–	–
58	63B5	95	115	140	9	4	4	12.8	–	–	–	–	–	–	–	–	–	–	11	11	11	11	11	11	11
	71B5	110	130	160	9	5	5	16.3	–	–	–	–	–	–	–	–	14	14	14	14	14	14	14	14	14
	80B5	130	165	200	11	5	6	21.8	–	–	–	19	19	19	19	19	19	19	19	19	19	19	19	19	19
	80B14	80	100	120	7	5	6	21.8	–	–	–	19	19	19	19	19	19	19	19	19	19	19	19	19	19
	90B5	130	165	200	11	5	8	27.3	24	24	24	24	24	24	24	24	24	24	–	–	–	–	–	–	–
	90B14	95	115	140	9	5	8	27.3	24	24	24	24	24	24	24	24	24	24	–	–	–	–	–	–	–
	100/112B5	180	215	250	13	5	8	31.3	28	28	28	28	28	28	28	28	28/–	28/–	–	–	–	–	–	–	–
	100/112B14	110	130	160	9	5	8	31.3	28	28	28	28	28	28	28	28	28/–	28/–	–	–	–	–	–	–	–

匡城传动 SHKCJX
传动装置专业制造商
PROFESSIONAL MANUFACTURER OF TRANSMISSION DEVICE
SKM系列
品牌源于匡城 口碑自然来 www.shkcjx.com

输入尺寸图表 / INPUT SIZE DIAGRAM

SKM..NEMA输入法兰尺寸 / Input Flange Dimension

56C-145TC

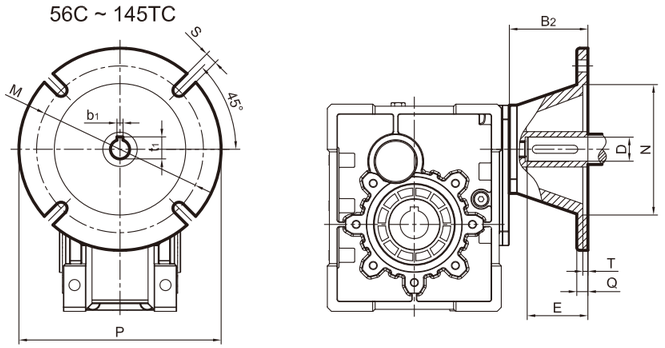

182TC-184TC

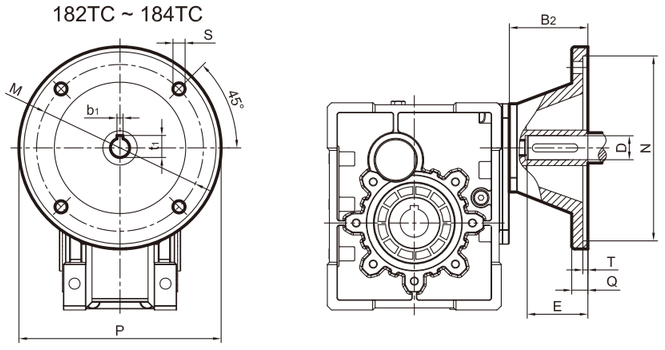

SKM	NEMA Flange	B2	D	E	b1	t1	M	N	P	Q	S	T
SKM28	56C	2.953	0.625	2.06	0.188	0.713	5.875	4.5	6.5	0.433	0.413	0.177
SKM38	56C	2.953	0.625	2.06	0.188	0.713	5.875	4.5	6.5	0.433	0.413	0.177
	143TC	2.953	0.875	2.12	0.188	0.963	5.875	4.5	6.5	0.433	0.413	0.177
	145TC											
SKM48 SKM58	56C	3.228	0.625	2.06	0.188	0.713	5.875	4.5	6.5	0.433	0.413	0.177
	143TC	3.228	0.875	2.12	0.188	0.963	5.875	4.5	6.5	0.433	0.413	0.177
	145TC											
	182TC	3.937	1.125	2.62	0.250	1.240	7.250	8.5	9.0	0.472	0.551	0.197
	184TC											

外形尺寸图表 / OUTLINE DIMENSION SHEET

SKM28..B..IEC

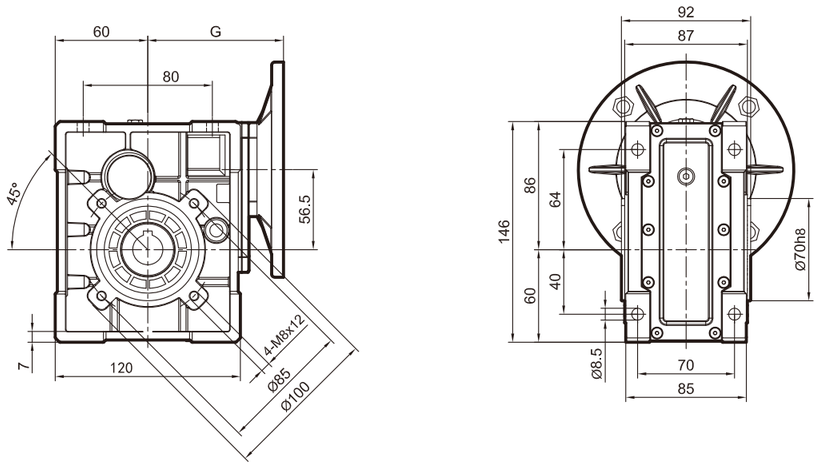

SKM28..C..IEC

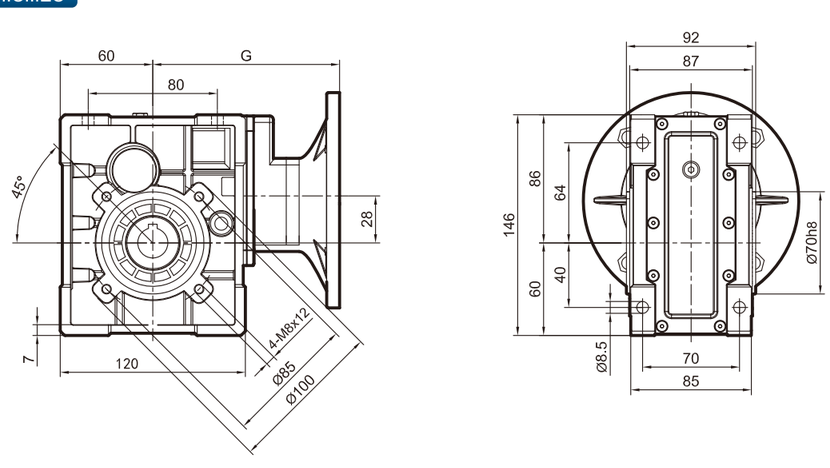

输出孔/Output hole

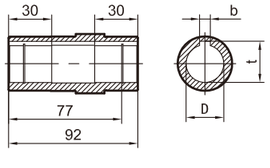

IEC	SKM	G
63B5	28B	101.5
	28C	119.5
71B5/B14	28B	102.5
	28C	120.5
80B5/B14	28B	122.5
90B5/B14	28B	122.5

D_{H8}	b	t
20*	6	22.8
25	8	28.3

*非标孔，订单时请说明。
*Only on request

SKM	Kg(重量)
28B	4. 2
28C	5

不包括马达
Weight without motor

匡城传动 SHKCJX
传动装置**专业制造商**
PROFESSIONAL MANUFACTURER OF TRANSMISSION DEVICE
SKM系列
品牌源于匡城　口碑自然来　www.shkcjx.com

外形尺寸图表 / OUTLINE DIMENSION SHEET

SKM38..B..IEC

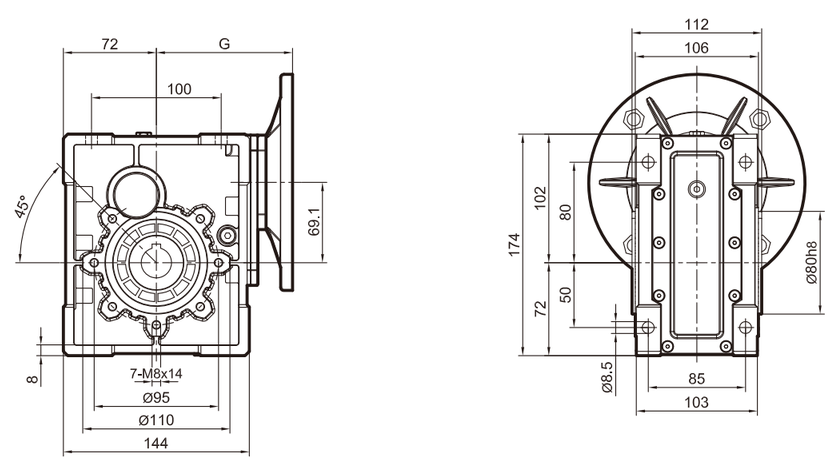

SKM38..C..IEC

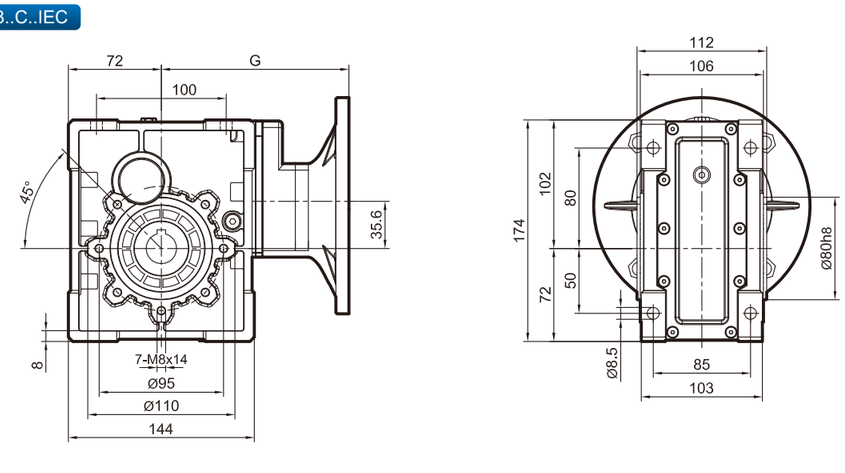

输出孔/Output hole

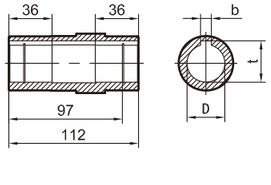

IEC	SKM	G
63B5	38B	112.5
	38C	137.5
71B5/B14	38B	119.5
	38C	144.5
80B5/B14	38B	139.5
	38C	164.5
90B5/B14	38B	139.5

D_{H8}	b	t
25	8	28.3
28*	8	31.3

*非标孔，订单时请说明。
*Only on request

SKM	Kg(重量)
38B	6.0
38C	6.8

不包括马达
Weight without motor

外形尺寸图表 / OUTLINE DIMENSION SHEET

SKM48..B..IEC

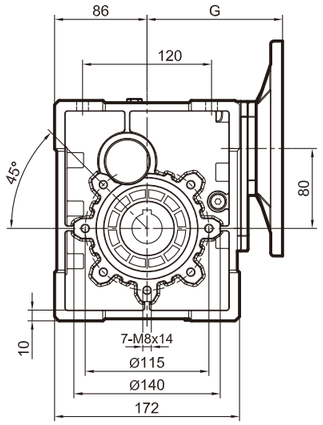

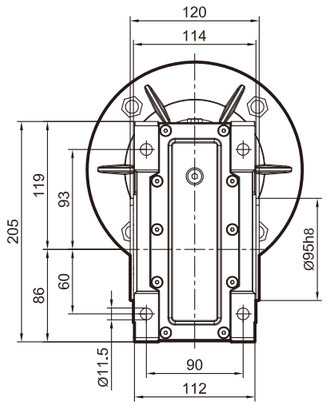

SKM48..C..IEC

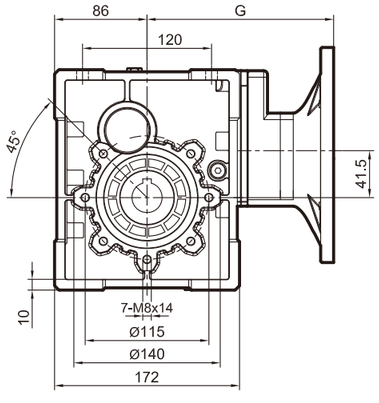

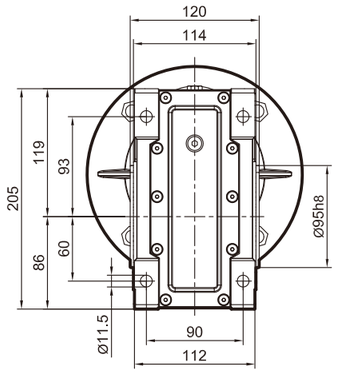

输出孔/Output hole

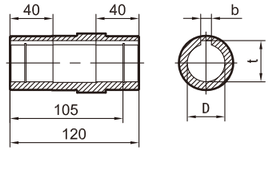

IEC	SKM	G
63B5	48C	154
71B5	48B	161
	48C	191
80B5/B14	48B	151
	48C	181
90B5/B14	48B	151
	48C	181
100/112B5	48B	161
100/112B14	48B	161

D_{H8}	b	t
28	8	31.3
30*	8	33.3
35*	10	38.3

*非标孔，订单时请说明。
*Only on request

SKM	Kg(重量)
48B	9.2
48C	10.8

不包括马达
Weight without motor

外形尺寸图表 / OUTLINE DIMENSION SHEET

SKM58..B..IEC

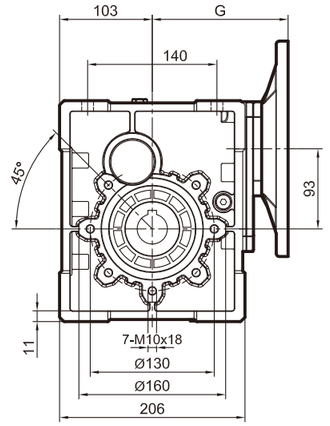

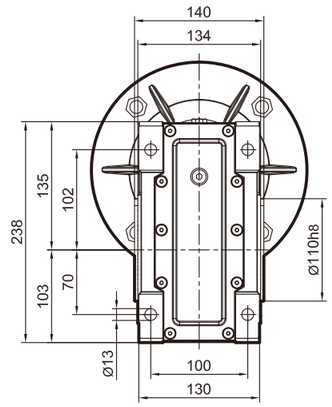

SKM58..C..IEC

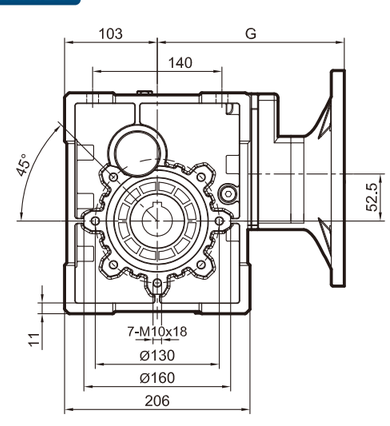

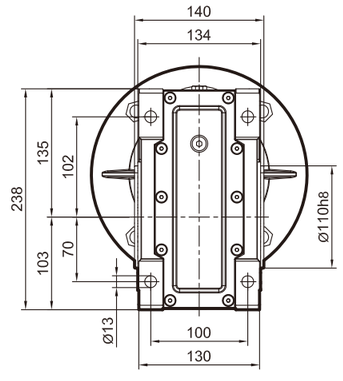

输出孔/Output hole

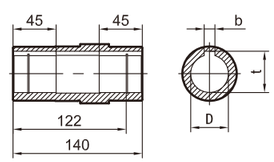

IEC	SKM	G
63B5	58C	176.5
71B5	58B	174
	58C	213.5
80B5/B14	58B	164
	58C	203.5
90B5/B14	58B	164
	58C	203.5
100/112B5	58B	174
100/112B14	58B	174

D_{H8}	b	t
35	10	38.3
38*	10	41.3

*非标孔，订单时请说明。
*Only on request

SKM	Kg(重量)
58B	13.3
58C	14.8

不包括马达
Weight without motor

外形尺寸图表 / OUTLINE DIMENSION SHEET

SKM..B..HS

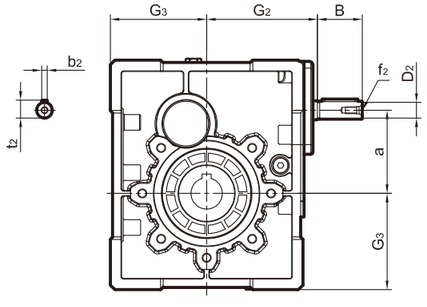

SKM..C..HS

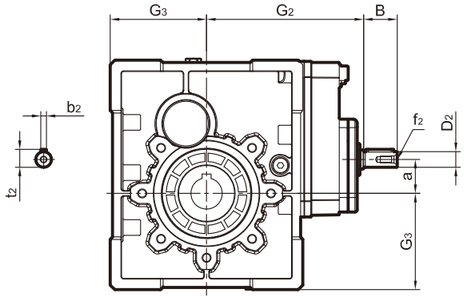

SKM	B	D_{2j6}	G_2	G_3	a	b_2	t_2	f_2
28B	23	11	70	60	56.5	4	12.5	-
28C	23	11	88	60	28	4	12.5	-
38B	30	14	85	72	69.1	5	16	M6
38C	23	11	110	72	35.6	4	12.5	-
48B	40	16	99	86	80	5	18	M6
48C	30	14	129	86	41.5	5	16	M6
58B	40	19	112	103	93	6	21.5	M6
58C	30	14	152	103	52.5	5	16	M6

匡城传动 SHKCJX
传动装置**专业制造商**
PROFESSIONAL MANUFACTURER OF TRANSMISSION DEVICE
SKM系列 品牌源于匡城 口碑自然来 www.shkcjx.com

附件尺寸图表 / ACCESSORIES DIMENSION SHEET

输出轴/Output Shafts

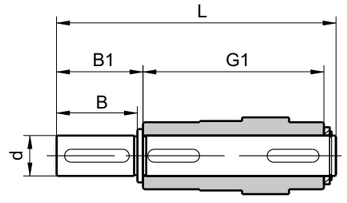

SS

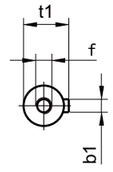

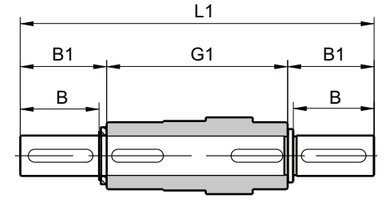

DS

SKM	d_{h6}	B	B_1	G_1	L	L_1	f	b_1	t_1
28	25	50	53.5	92	153	199	M10*27	8	28
38	25	50	53.5	112	173	219	M10*27	8	28
48	28	60	63.5	120	192	247	M10*27	8	31
58	35	80	84.5	140	234	309	M12*34	10	38

扭力臂/Torque Arm

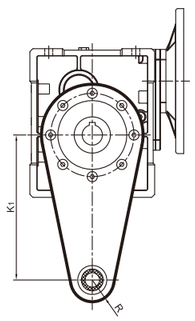

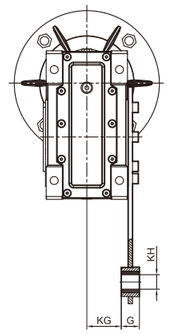

SKM	K1	G	KG	KH	R
28	100	14	38.5	10	18
38	150	14	49	10	18
48	200	25	47.5	20	30
58	200	25	57.5	20	30

防尘盖/Cover

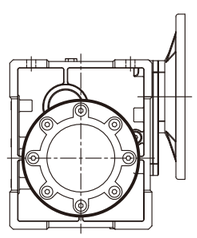

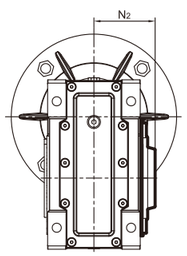

SKM	N2
28	58
38	69
48	74
58	85

附件尺寸图表 / ACCESSORIES DIMENSION SHEET

输出法兰 / Output flange

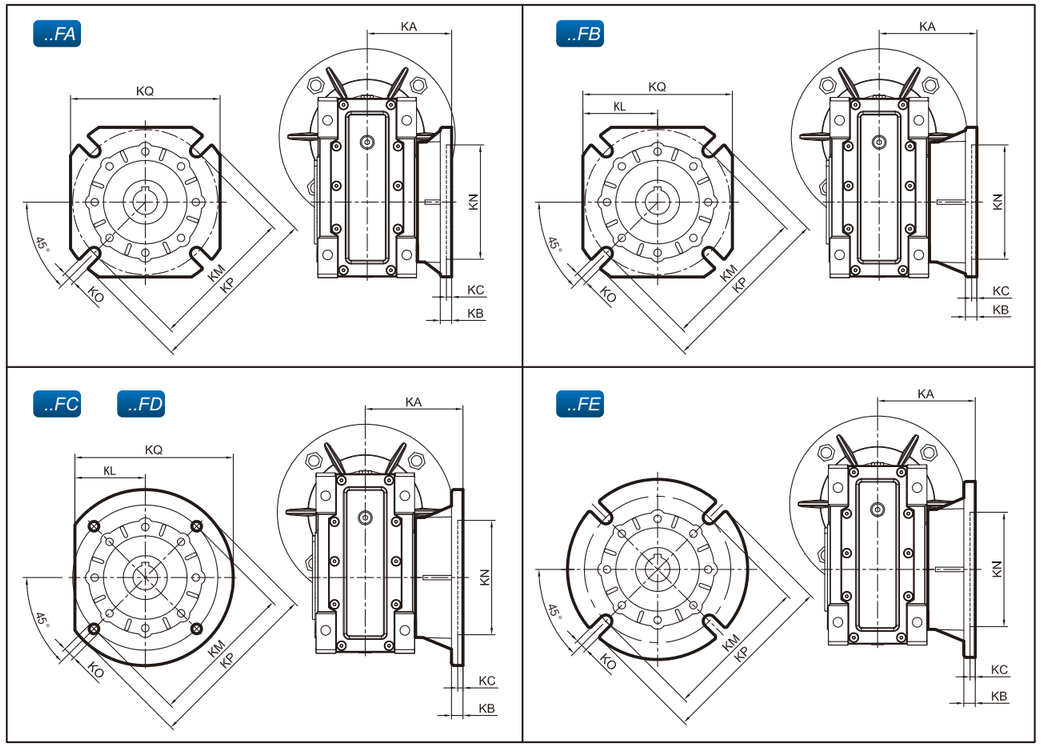

SKM	FA							
	KA	KB	KC	KM	KN_{H8}	KO	KP	KQ
28	90	9	5	85	70	11(n=4)	125	110
38	82	10	6	150	115	11(n=4)	180	142
48	111	13	6	165	130	14(n=4)	200	170
58	111	13	6	175	152	14(n=4)	210	200

SKM	FB								
	KA	KB	KC	KM	KN_{H8}	KO	KP	KQ	KL
28	120	9	5	85	70	11(n=4)	125	110	–
38	112	10	6	150	115	11(n=4)	180	142	–
48	90	13	6	130	110	11(n=4)	160	–	–
58	122	18	6	215	180	14(n=4)	250	–	105

SKM	FC								
	KA	KB	KC	KM	KN_{H8}	KO	KP	KQ	KL
28	89	10	5	130	110	9(n=4)	160	–	66
38	98	10	5	165	130	11(n=4)	200	–	80
58	110	17	6	165	130	11(n=4)	200	–	–

SKM	FD								
	KA	KB	KC	KM	KN_{H8}	KO	KP	KQ	KL
28	72	14.5	5	115	95	11(n=4)	140	–	60
38	107	10	5	165	130	11(n=4)	200	–	80
58	151	13	6	175	152	14(n=4)	210	200	–

SKM	FE						
	KA	KB	KC	KM	KN_{H8}	KO	KP
38	80.5	16.5	5	130	110	11(n=4)	160

* 当KQ不存在时，说明法兰为圆形。
* If KQ isn't existing, the flage is circular.

* 当KL存在时，说明法兰为圆形且切边。
* If KQ is existing, the flage isn't completely circular.

匡城传动 SHKCJX
传动装置**专业制造商**
PROFESSIONAL MANUFACTURER OF TRANSMISSION DEVICE
SKM系列
品牌源于匡城　口碑自然来　www.shkcjx.com

安装方位图 / INSTALLATION POSITIONS DIAGRAM

输出法兰位置 / Position diagram for output flange

FA1,FB1,FC1,FD1,FE1	FA2,FB2,FC2,FD2,FE2
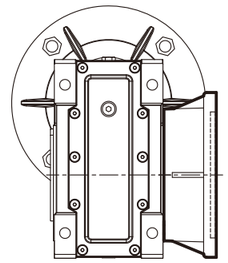	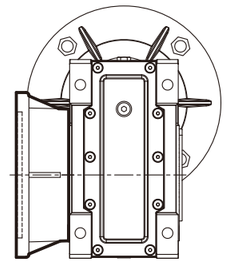

如果没有特殊要求，一般按出厂标准位置如图F..1方式和B3位置提供。

Unless specified otherwise, the gear units is supplied with the flange in pos. **F..1** referred to position **B3**.

单向输出轴位置 / Position diagram for single output shaft

SS1	SS2
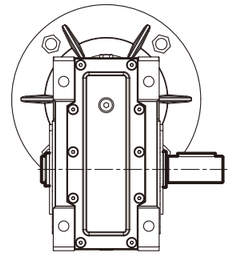	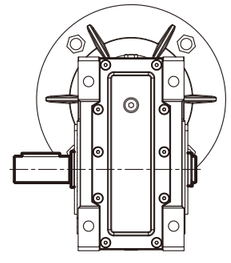

如果没有特殊要求，一般按出厂标准位置如图SS1方式和B3位置提供。

Unless specified otherwise, the gear units is supplied with the flange in pos. **SS1** referred to position **B3**.

电机接线盒方位/Position of motor terminal box

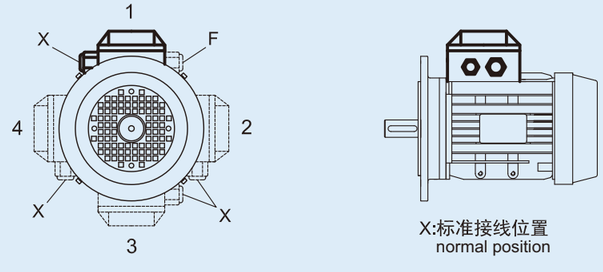

安装方位图 / INSTALLATION POSITIONS DIAGRAM

符号/Symbol	含义/Meaning
	排气阀 Breather valve
	油位塞 Oil level plug
	放油塞 Oil drain plug

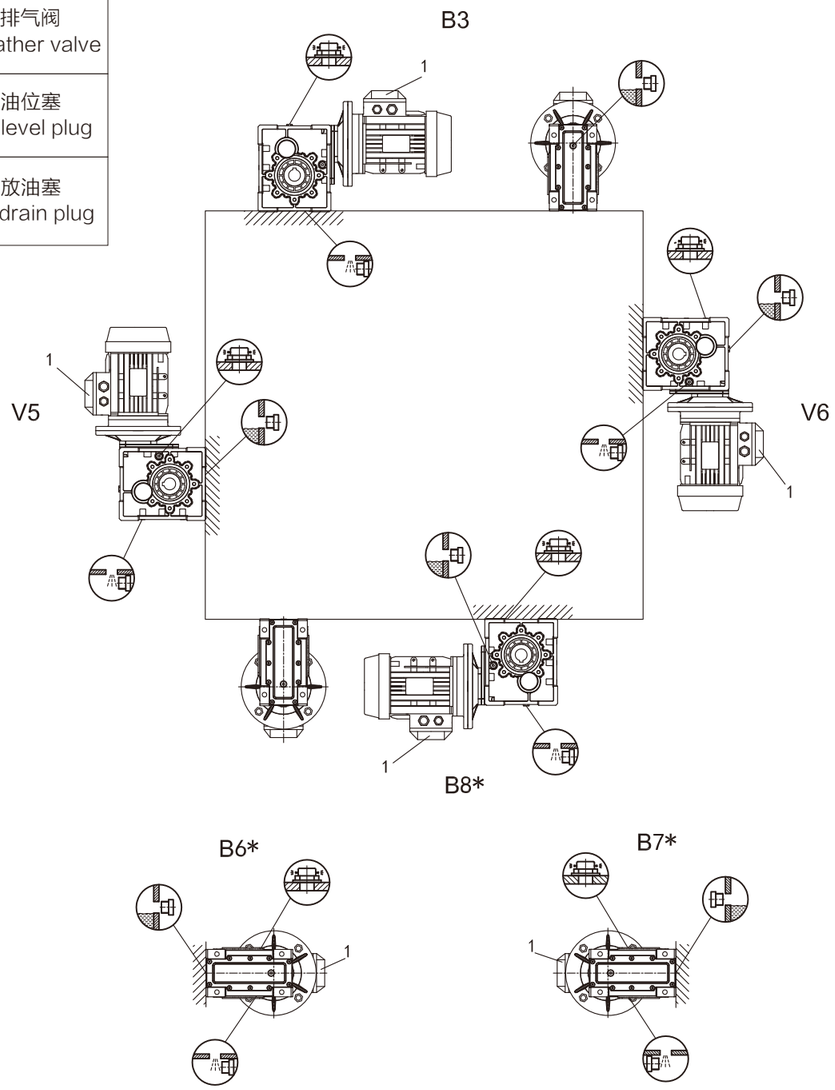

* 表示在此安装方式，不能仅凭油位塞加注润滑油，油位需高出油位塞，加注量按表内所示。

* It means the lubricant can't be added according to the oil level line plug, but also higher the plug to fill quantity as shown in the table.

匡城传动 SHKCJX
传动装置**专业制造商**
PROFESSIONAL MANUFACTURER OF TRANSMISSION DEVICE
SKM系列
品牌源于匡城　口碑自然来　www.shkcjx.com

安装方位图 / INSTALLATION POSITIONS DIAGRAM

旋转方向 / Direction of rotation

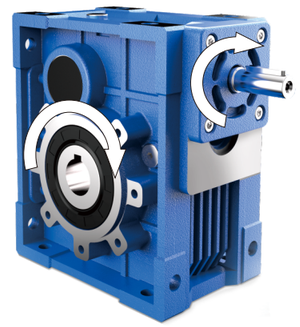

SKM..B..HS

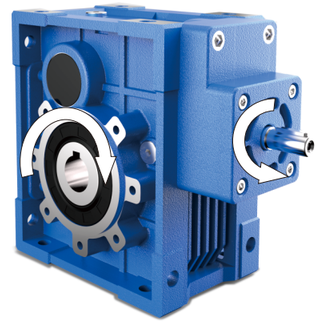

SKM..C..HS

减速机在使用时，电机可正反转输入使用，推荐使用上图所示输入轴旋转方向为准双曲面齿轮最佳啮合方向。

The motor can be run either CW or CCW while using with gearbox, the left chart is recommended.

安装 / INSTALLATION

注意事项 / Matters needing attention

安装减速机时要注意以下一些事项：

1. 减速机与机械设备装配之前，要检查减速机输出轴的旋转方向是否正确；
2. 减速机与原动机、设备装配之前，应检查各轴径、孔径、键和键槽的偏差尺寸，避免装配过紧、过松影响减速机性能；
3. 减速机必须牢固地安装在机械设备上，避免有松动或振动；
4. 尽可能地避免减速机暴露在烈日阳光下和恶劣环境中；
5. 如果减速机存放时间长达4-6个月，应检查油封是否浸润在润滑油中，可能油封唇口会粘在轴上，甚至失去了弹性，由于适合的弹性是油封必须的工作条件，所以推荐更换油封；
6. 所有橡胶件和透气孔不能沾有油漆；
7. 与减速机的空心轴或实心轴配合连接时，应在轴上配合部分涂上润滑油，以免卡死或氧化；
8. 使用时必须检查油位（如油位镜孔或打开油塞，小型号是没有的）；
9. 使用新减速机时，不能满负载起动，应该逐步增大负载；
10. 使用各类电机直连型减速机时，若电机重量偏大，应设支撑装置；
11. 确保电机风扇附近有良好的通风环境，以免影响散热效果；
12. 减速机的标准工作环境温度是-5℃至40℃，如果不在这范围时，请与我们技术服务人员联系。

To install the gear units it is necessary to note the following recommendations:

1. Check the correct direction of rotation of the gear units output shaft before fitting the unit to the machine.
2. Before mount with the prime mover and device,please check the reducer's every axial diameter,aperture,key and not key and key slot,to be sure their dimensions are not deviation,and avoid assembling too tight or too loose,unless it will influence the reducer's performance.
3. The mounting on the machine must be stable to avoid any vibration.
4. Whenever possible,protect the gear units against solar radiation and bad weather.
5. In the case of particularly lengthy periods of storage(4-6 months),if the oil seal is not immersed in the lubricant inside the unit,it is recommended to change it since the rubber could stick to the shaft or may even have lost the elasticity it needs to function properly.
6. Painting must definitely not go over rubber parts and the holes on the breather plugs,if any.
7. When connect with hollow or solid shaft,please grease the joint to avoid lock or oxidation.
8. Check the correct level of the lubricant through the indicator,if there is one.
9. Starting must take place gradually,without immediately applying the maximum load.
10. Supporting unit is required when using various of reducer matched with motor directiy and the weight of motor is a little bigger than common.
11. Ensure the motor cools correctly by assuring good passage of air form the fan side.
12. In the case of ambient temperatures <-5℃ or > +40℃ call the Technical Service.

匡城传动 SHKCJX
传动装置专业制造商
PROFESSIONAL MANUFACTURER OF TRANSMISSION DEVICE
SKM系列
品牌源于匡城 口碑自然来 www.shkcjx.com

安装 / INSTALLATION

使用限制/Critical applications

这本样本给出的参数基本上是按B3安装方位来编的，即第一级没有完全浸入油中。对于其他安装方位和输入转速，请参考下面表格中相应参数。当遇到下列应用情况时，如有必要请与我们技术服务人员联系。

1. 在原有上提高转速时，
2. 应用在惯性特别大的设备上时；
3. 应用在如升降机（需要自锁考虑）时；
4. 当减速机出现故障有可能会对操作者造成危害时；
5. 应用在减速机过度疲劳状态时；
6. 工作环境温度低于-5℃或高于40℃时；
7. 在化学腐蚀环境中使用时；
8. 在盐性环境中使用时；
9. 在辐射性高的环境中使用时；
10. 在环境气压不在正常大气压力下使用时；
11. 安装方位在这样本中没有被提到时。

避免把减速机部分或整台浸入水中或其他液体中。

减速机承受的最大负载扭矩不能超过两倍于性能参数表中规定的正常扭矩（当使用系数fs=1时）；这里最大负载扭矩是指承受瞬间短暂的过载，他出现在过载启动、刹车、振动或其他动态操作环境中。

1. As a speed increasing;
2. Applications with especially high inertia;
3. Use as a lifting winth;
4. Use in services thant could be hazardous for people if the reductions unit dails.
5. Applications with high dynamic strain on the case of the reduction unit.
6. In places with T°under -5 ▪ or over 40 ▪ .
7. Use in chemically aggressive environments.
8. Use in a salty environment.
9. Use in raadioactive environments.
10. Use in environments pressures other than atmospheric pressure.
11. Mounting positions not envisaged in the catalogue.

Avoid applications where even partial immersion of the reduction unit is required.

The maximum torque that the gear reducer can support must not exceed two times the nominal torque (fs=1) stated in the performance tables.Intended for momentary overloads due to starting at full load,braking,shocks or other causes,particularly those are dynamic.

润滑油 / LUBRICATION

润滑油型号 / Types of lubrication

	环境温度(℃) Ambient Tempreatur(℃) ℃ −50 0 50 +100	ISO粘度 ISO Viscosity Class	SHELL	Mobil MOBIL	BP	润滑油类型 Lubrication type
SKM	-10 +40	VG220	Shell Omala S2G220	Mobil gear 630	BP Energol GX-XP 220	矿物油 Mineral oil
	-20 +25	VG150 VG100	Shell Omala S2G220	Mobil gear 627	BP Energol GX-XP 100	
	-30 +10	VG68-46 VG32	Shell Tellus S2V32	Mobil D.T.E.13M		
	-40 -20	VG22 VG15	Shell Tellus S2V15	Mobil D.T.E.11M	BP Energol HLP-HM 15	
	-40 +80	VG220	Shell Omala S4GX220	Mobil SHC630		合成油 Synthetic oil
	-40 +40	VG150		Mobil SHC629		
	-40 +10	VG32		Mobil SHC624		

润滑油加注量/Lubricant fill quantity

减速机型号 Gear units		加注量 Fill quantity in liters 单位：升（L）					
		B3	B6	B7	B8	V5	V6
SKM	SKM28B	0.22	0.20*	0.13*	0.15	0.25	0.14
	SKM28C#	0.07	0.04	0.04	0.05	0.08	0.09
	SKM38B	0.42	0.35*	0.24*	0.22	0.46	0.25
	SKM38C#	0.07	0.04	0.04	0.05	0.08	0.09
	SKM48B	0.70	0.58*	0.42*	0.42	0.75	0.45
	SKM48C#	0.13	0.09	0.09	0.09	0.15	0.17
	SKM58B	1.21	0.95*	0.72*	0.67	1.30	0.74
	SKM58C#	0.13	0.09	0.09	0.09	0.15	0.17

规定的加注量为参考值。精准值的变化与级数和传动比有关。请您在加注润滑油时一定要注意油位螺栓所指示的精确油量。后期调整安装方式时，您必须根据改变后的安装方式相应调整加注润滑剂。下表中列出了不同安装方式（B3、B6、B7.....）的减速机相应的标准参考润滑油注入量值。

The specified fill quantities are recommended values.The precise values vary depending on the number of stages and gear ratio.When filling,it is essential to check the oil level plug since it indicates the precise oil capacity. The following tables show guide values for lubricant fill quantities in relation to the mounting position （B3、B6、B7……）

#: 采用3级传动减速机时，各自加注3级箱体和2级箱体的润滑油，润滑油互不相通，表中的加注量为3级箱体润滑油加注量。
#: Means the oil quantity in the 3rd stage housing,as this one is separated from the 2nd housing,please fill them separately while in 3 stages.

*: 表示在此安装方式，不能仅凭油位塞加注润滑油，油位需高出油位塞，加注量按表中所示。
*: It means the lubricat can't be according to the oil level line plug，but also highter the plug the fill quantity sa shown in the table.

匡城传动 SHKCJX
传动装置专业制造商
PROFESSIONAL MANUFACTURER OF TRANSMISSION DEVICE
SKM系列
品牌源于匡城 口碑自然来 www.shkcjx.com

维护 / MAINTENANCE

1）对于齿轮箱，首次换油必须在工作大约300小时（齿轮磨合期）后进行，在换油时应使用合适的清洗剂小心的冲洗齿轮箱，不得将矿物油和合成油混合。

2）每3000工作小时，最低程度半年，应检测油以及油位，有密封不严引起滴漏的常规检测，若是IEC输入的减速机，则检测检查弹性体，必要时进行更换。

3）格局不同的工作条件（见下图）而定，最长每三年检测一次，更换矿物油，更换轴承润滑油脂。

4）根据不同的工作条件而定，更换输出轴上的油封。

5）产品出现故障时，不要拆卸部件，与本公司销售服务部门联系（需提供减速机规格、出厂日期、编号、已使用时间、主机名称、主机生产单位和故障类型）后，再采取合理的措施。

1) For gear units,first oil change should be after about 300 hours (run-in period).The right lotion is required to clean the gear units with care.Never mix the synthetic oil and mineral oil together.

2) Every 3000 working time,at least every 6 months,you have to check the oil and oil level,the seals visually for leakage.For IEC input gear units,the elastomer should be tested or replaced if necessary.

3) Depending on the operating conditions(see chart below),every 3 years at the latest for inspection is needed.Then change the mineral oil and replace the bearing grease.

4) Depending on the operating conditions,change the oil seals on output shaft.

5) Once the malfunctions appear,stop disassembling the parts,and firstly please contact the customer service (the information about specification,delivery date,series number,time used,name of machine,machine manufacturer,malfunction problems is required), then take the reasonable measures.

适用于正常环境条件下标准减速机的更换时间间隔
Oil change intervals for standard gear units under normal environmental conditions

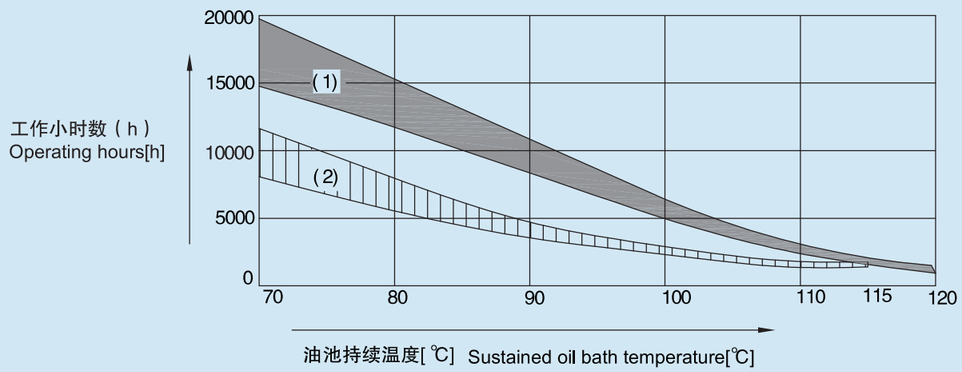

● 每种机油类型的平均值为70℃ / Average value per oil type at 70℃
（1）合成油 / Synthetic oil （2）矿物油 / Mineral oil

维护 / MAINTENANCE

存放 / Storage

1. 有顶棚，防雨雪，无振动。
2. 在设备和地面之间垫放木块或其他材料。
3. 开箱后暂不使用的减速机在其加工表面涂上防锈油，并应及时放回包装箱内。
4. 在定期检查的情况下，两年以及更长时间。在进行检查时，应检查清洁度和机械损伤，检查防锈层是否完好。

1. Under roof"protected against rain and snow"no shock loads.
2. Underlay the block and other material between the ground and equipment.
3. The opened but not used gear units should be added with the anti-corrosive oil on its surface,and then return to the packing containers timesly.
4. Two years or more given regular inspections.Check for cleanliness and mechanical damage as part of the inspection,Check corrosion protection.

定货须知 / NOTICE FOR ORDER

减速机订单请向我们提供以下信息：

1. 减速机型号标记（减速机类型、速比、功率和安装方式）。
2. 减速机表面喷涂颜色，一般按银白色提供。
3. 订购数量。
4. 其他特殊要求。
   单位名称、联系人、联系电话。

Please offer the following information when place the orders:

1. The model mark of the gear units(type,ratio,power and mounting position).
2. Generally the gear units paint in silver.
3. Quantity ordered.
4. Qther special requirements.
   Company,contact and telephone.

匡城传动 SHKCJX
传动装置专业制造商
PROFESSIONAL MANUFACTURER OF TRANSMISSION DEVICE
SKM系列
品牌源于匡城 口碑自然来 www.shkcjx.com

减速机运转故障 / GEAR UNIT MALFUNCTIONS

故障 Problem	可能的原因 Possible cause	解决方法 Remedy
异常、均匀的运转噪声 Unusual,regular running noise	A.滚动/碾压噪声:轴承损坏 B.冲击型噪声:齿轮啮合不均匀 A.Meshing/grinding noise:Bearing damage. B.Knocking noise:Irregularity in the gearing	A.检测润滑油,更换轴承 B.请向客户服务部咨询 A.Check the oil,change bearings B.Contact customer service
异常、不均匀的运转噪声 Unusual,irregular running noise	机油中有异物 Foreign bodies in the oil	A.检测润滑 B.停止运转传动装置,向客户服务部咨询 A.Check the oil B.Stop the drive,contact customer service
机油泄漏 A.在减速机盖上 B.在电机凸缘上 C.在电机轴密封圈上 D.在减速机凸缘上 F.在输出端轴密封圈上 Oil leaking A. From the gear cover plate B. From the motor flange C. From the motor oil seal D. From the gear unit flange F. From the output end oil sea	A. 减速机底座上的橡胶密封发生渗漏 B. 密封圈损坏 C. 减速机没有排气 A. Rubber seal on the gear cover plate leaking B. Seal defective C. Gear unit not vented	A.拧紧各个外盖上的螺钉并且观察减速机。如果机油继续泄露，请向客服服务部咨询 B.请向客户服务部咨询 C.给减速机排气(参见"安装方式") A.Tighten the bolts on the gear cover plate and observe the gear unit.Oil still leaking: Contactcustomer service B.Contact customer service C.Vent the gear unit(see "Mounting Positions")
机油从排气阀门旁渗出 Oil leaking from breaking valve	A. 机油太多 B. 传动装置安装方式错误 C. 频繁冷起动（机油起泡沫）和/或者较高的油位 A. Too much oil B. Drive operated in incorrect mounting position C. Frequent cold starts(oil foams)and/or high oillevel	A.修正油量(参见"润滑油") B.正确安装排气阀并且矫正油位（参见"安装方式"） A.Correct the oil level("see Sec.Inspection and Maintenance") B.Mount the breather valve correctly(see Sec."Mounting Positions")and correct the oil leve(see"Lubricants")
尽管电机在运转或者传动轴已经被驱动，但是传动轴不转动 Oil leaking from breaking valve	减速机中的轴轮毂联接断裂 Connection between shaft and hub in gear unit interrupted	将减速机或减速电机送修 Send in the gear unit/gearmotor for repair

● 在磨合试运转阶段（24小时的运转时间内），轴密封圈有可能出现短期内的漏油/油脂的现象
Short-term oil/grease leakage at the oil seal is possible in the run-in phase (24 hours running time)

减速机负载特征表(参考件) / MCHARGE CHARACTERISTIC CHART(FOR REFEREBCE)

风机类 AIR BLOWERS		转臂式起重传动齿轮装置 Bracket swing gear assembly	B
风机（轴向和径向） Air blower（axial or radial）	A	吊杆起落齿轮传动装置 Derrick gear assembly	B
冷却塔风扇 Fan of cooling tower	B	转向齿轮传动装置 Steering gear assembly	B
引风机 Induced draught fan	B	行走齿轮传动装置 Moving gear assembly	C
螺旋活塞式风机 Rotary piston type fan	B	**挖泥机类 LAND DREDGER**	
蜗轮式风机 Turbo-fan	A	筒式传送机 Drum-type conveyer	C
建筑机械类 CONSTRUCTION MACHINERY		筒式转动机 Drum-type rotation wheel	C
混凝土搅拌机 Concrete mixer	B	挖泥头 Dredger head	C
卷扬机 Hoist	B	机动绞车 Powered crab	B
路面建筑机械 Road building machinery	B	泵 Pump	B
钻孔机 Boring mill	B	泵转向齿轮传动装置 Pump turning gear assembly	B
化工机械类 CHEMICAL MACHINERY		行走齿轮传动装置（履带） Moving gear assembly（apron wheel）	C
搅拌机（液体） Mixer（liquid）	A	行走齿轮传动装置（铁轨）Moving gear assembly（track）	B
搅拌机（半液体） Mixer（half liquid）	B	**食品工业机械类 FOODSTUFF PROCESSING MACHINERY**	
离心机（重型） Centrifuge（heavy）	B	灌注及装箱机器 Placer or box filler	A
离心机（轻型） Centrifuge（light）	A	甘蔗压榨机 Cane crusher	A
冷却滚筒** Cooling rolling drum	B	甘蔗切断机** Cane cutter	B
干燥滚筒** Dry rolling drum	B	甘蔗粉碎机** Cane crasher	C
搅拌机 Mixer	B	搅拌机 Mixer	B
压缩机类 COMPRESSOR		酱状物吊筒 Paste bucket	B
活塞式压缩机 Piston type compressor	C	装包机 Packager	A
蜗轮式压缩机 Turbo-compressor	B	糖甜菜切断机 Beet slicer	B
传送运输机类 TRANSMISSION FREIGHTER		糖和甜菜清洗机 Beet washing machine	B
平板传送机 Pan conveyer	B	**发动机及转换器类 MOTOR AND CONVERSION EQUIPMENTS**	
平衡块升降机 Balance lifter	B	频率转换器 Frequency converter	C
槽式传送机Trough conveyer	B	发动机 Motor	C
带式传送机（大件） Ribbon conveyer（large piece）	C	焊接发动机 Welding motor	C
带式传送机（碎料） Ribbon conveyer（small piece）	B	**洗衣机类 WASHING MACHINE**	
筒式面粉传送机 Drum-type flour conveyer	A	滚筒 Rolling drum	B
链式传送机 Chain conveyer	B	洗衣机 Washing machine	B
环式传送机 Ring type conveyer	B	**金属滚轧机类 METAL ROLLER MACHINE**	
货物升降机 Lifter	B	钢坯剪断机** Steel cutter	C
卷扬机 Hoist	B	链式输送机** Chain converter	B
连杆式传送机 Crank-connecting conveyer	B	冷轧机** Cold mill	C
载入升降机 Lifter	B	连铸成套设备 Continuous casting equipments	B
螺旋式传送机 Worm conveyer	B	冷床** Cold bed	B
钢带式传送机 Steel-band conveyer	B	剪料机头** Cropper	C
链式槽型传送机 Chain reed-type conveyer	B	交叉转弯输送机** Cross steering transmitter	B
绞车运输机 Crab freighter	B	除锈机** Druster	C
起重机类 HOIST		重型和中型板轧机** Heavy and medium steel mill	C
卷扬机齿轮传动装置 Hoist gear assembly	A	捧坯切轧机** Bar mill	C

匡城传动 SHKCJX
传动装置专业制造商
PROFESSIONAL MANUFACTURER OF TRANSMISSION DEVICE
SKM系列 品牌源于匡城 口碑自然来 www.shkcjx.com

减速机负载特征表(参考件) / MCHARGE CHARACTERISTIC CHART(FOR REFEREBCE)

捧坯转运机类 BAR TRANSMISSION EQUIPMENTS	B	**泵类 PUMPS**	
捧坯推料机 Bar pusher	B	离心泵（稀液体）Centrifugal pump(thin liquid)	A
推床 Push bed	B	离心泵（半液体）Centrifugal pump(half liquid)	B
剪板机** Shears	C	活塞泵 Displacement pump	C
板材摆升降台** Lumber elevator platform	B	柱塞泵 Plunger pump	C
轧辊调整装置 Roll adjusting equipments	B	压力泵 Force pump	C
辊式矫直机 Roller leveling machine	B	**塑料机械类 PLASTIC EQUIPMENTS**	
轧钢机辊道（重型）** Mill rolling way(heavy)	C	压光机** Glazing press	B
轧钢机辊道（轻型）** Mill rolling way(light)	B	挤压机** Ejecting press	B
薄板轧机** Sheet rolling mill	C	螺旋压出机** Spiral extruding machine	B
修整剪切机** Trimming shears	B	混合机** Mixing machine	B
焊管机 Pipe welder	C	**橡胶机械类 RUBBER EQUIPMENT**	
焊管机（带材和线材）Soldering machine(belt material and wire rod)	B	压光机** Glazing press	B
线材拉拔机 Wire drawbench	B	挤压机** Ejecting press	C
金属加工机床类 METAL PROCESSING MACHINE TOOLS		混合搅拌机** Mixing stir machin	B
动力轴 Power shaft	A	捏合机 Kneading machine	B
锻造机** Forging machine	C	滚压机** Roller machine	C
锻锤 Drop hammer	C	**石料、瓷土料加工机械类 STONE PORCELAIN CLAY PROCESSING EQUIPMENTS**	
机床及辅助装置 Machine tool and necessary	A		
机床及主要传动装置 Machine tool and main driving equipment	B	球磨机 Ball crusher	B
金属刨床 Metal facing machine	C	挤压料碎机 Ejecting press and breaker	C
板材矫直机床 Plate-leveling machine tool	C	破碎机 Breaker	C
冲床 Backing-out punch	C	压砖机 Brick press	C
冲压机床 Press machine tool	C	锤料碎机** Beating crusher	C
剪床 Cutting machine	B	转炉** Converter	C
薄板弯曲机床 Sheet bending machine tool	B	筒型磨机** Cylinder mill	C
石油工业机械类 PETROLEUM PROCESSING MACHINERY		**纺织机械类 TEXTILE MACHINERY**	
输油管油泵** Pump of oil pipe line	B	送料机 Feeding machine	B
转子钻井设备 Rotary drilling equipment	C	织布机 Loom machine	B
制纸机类 PAPERING MACHINE		印染机 Dyeing machine	B
压光机** Glazing press	C	精致筒 Purified drum	B
多层纸板机** Multilayer paper board machine	C	威罗机 Welon machine	B
干燥滚筒** Drying cylinder	C	**水处理设备类 WASTER TREATMENT EQUIPMENTS**	
上光滚筒** Glazing cylinder	C	鼓风机** Air blast	B
搅浆机** Masher	C	螺杆泵 Screw pump	B
搅浆擦碎机** Mashing and breaking machine	C	**木料加工机床 WOOD PROCESSING MACHINE TOOL**	
吸水滚** Suction oil	C	剥皮机 Barker	C
潮纸滚压机** Wet paper roller machine	C	刨床 Facing machine	B
吸水滚压机木** Water absorbing roller machine	C	锯床 Saw bench	C
威罗机 Welon machine	C	木材加工机床 Wood processing machine tool	A

注：A—均匀冲击负载；B—中等冲击负载；C—重冲击负载；**—用于24小时工作制。
Note：A-Uniform load；B-Moderate shock load；C-Heavy shock load；**-for 24hour system.

产品构造原理 / PRODUCT STRUCTURE PRINCIPLE

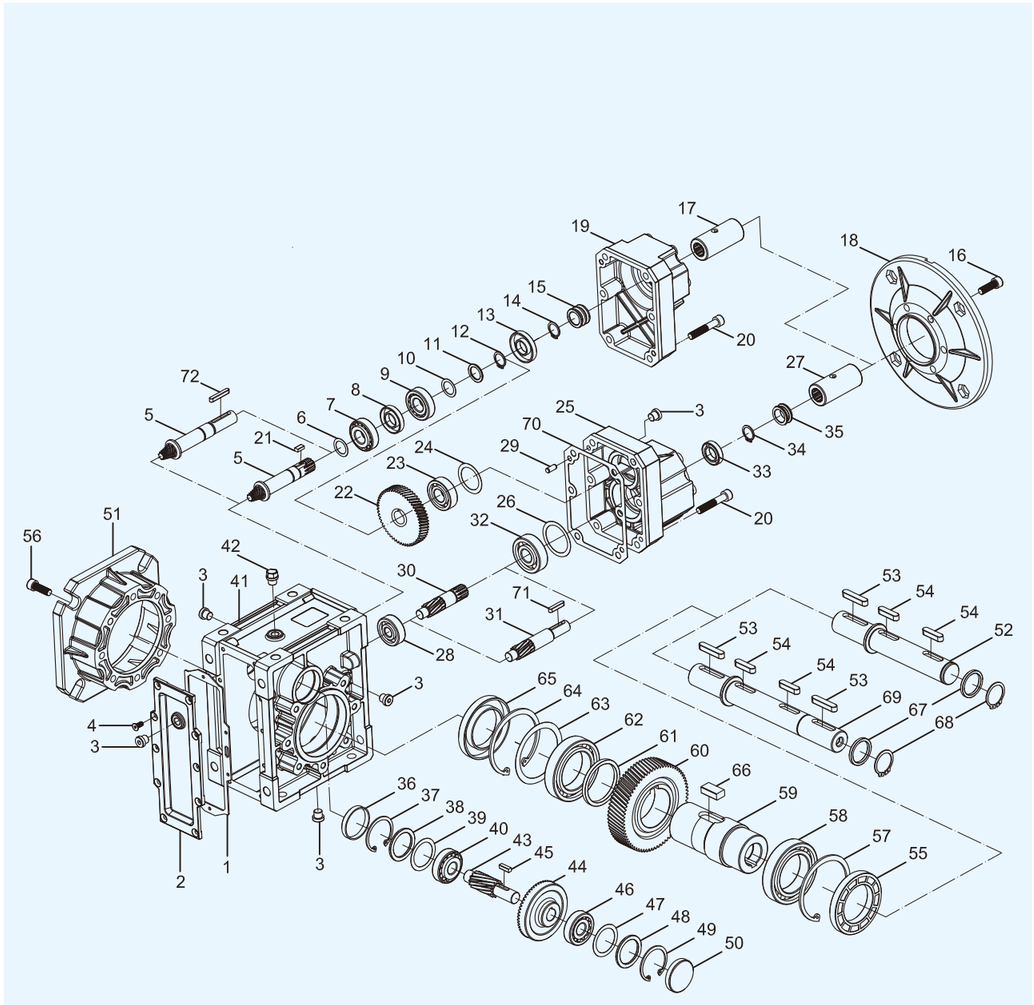

1	橡胶垫 / Rubber gasket	38	垫圈 / Washer
2	齿轮箱盖板 / Gearcase cover	39	调整垫片 / Shim ring
3	油塞 / Oil plug	40	轴承 / Bearing
4	内六角沉头螺钉 / Hexagon sunk screw	41	齿轮箱体 / Gearcase
5	主动齿轮轴 / Pinion shaft	42	透气阀 / Breather valve
6	调整垫片 / Shin ring	43	主动齿轮轴 / Pinion shaft
7	轴承 / Bearing	44	从动齿轮 / Gear
8	油封 / Oil seal	45	键 / Key
9	轴承 / Bearing	46	轴承 / Bearing
10	调整垫片 / Shin ring	47	调整垫片 / Shim ring
11	垫圈 / Washer	48	垫圈 / Washer
12	轴用挡圈 / Shaft-circlip	49	孔用挡圈 / Hole-circlip
13	油封 / Oil seal	50	油封盖 / Closing cap
14	轴用挡圈 / Shaft-circlip	51	输出法兰 / Output flange
15	橡胶套 / Rubber boot	52	单向输出轴 / Single output shaft
16	内六角螺钉 / Inner hex screw	53	键 / Key
17	输入轴 / Input shaft	54	键 / Key
18	输入法兰 / Input flange	55	油封 / Oil seal
19	两级输入箱盖 / 2 stage input box cover	56	内六角螺钉 / Inner hex screw
20	内六角螺钉 / Inner hex screw	57	孔用挡圈 / Hole-circlip
21	键 / Key	58	轴承 / Bearing
22	从动齿轮 / Gear	59	输出轴 / Hollow shaft
23	轴承 / Bearing	60	从动齿轮 / Gear
24	调整垫片 / Shim ring	61	垫圈 / Washer
25	三级输入箱盖 / 3 stage input box cover	62	轴承 / Bearing
26	调整垫片 / Shim ring	63	调整垫片 / Shim ring
27	输入轴 / Input shaft	64	孔用挡圈 / Hole-circlip
28	轴承 / Bearing	65	油封 / Oil seal
29	圆柱销 / Stifte	66	键 / Key
30	主动齿轮 / Pinion	67	垫圈 / Washer
31	主动齿轮轴 / Pinion shaft	68	轴用挡圈 / Shaft-circlip
32	轴承 / Bearing	69	输出双向轴 / Double output shaft
33	油封 / Oil sea	70	密封纸垫 / Housing gasket
34	轴用挡圈 / Shaft-circlip	71	键 / Key
35	橡胶套 / Rubber boot	72	键 / Key
36	油封盖 / Closing cap		
37	孔用挡圈 / Hole-circlip		